# WISCONSIN

# Air Cooled

# HEAVY DUTY ENGINES

This publication is not an official department of the Army publication and is not available through The Adjutant General Publication Depot.

Corps of Engineers Stock Number 7610-C-1-0028

## INSTRUCTION BOOK AND PARTS LIST

## MODEL VP4D

ISSUE MM-233-C

WORLD'S LARGEST BUILDERS OF HEAVY DUTY AIR COOLED ENGINES

# IMPORTANT

## STARTING AND OPERATION OF NEW ENGINES

Careful breaking in of a new engine will greatly increase its life and result in trouble-free operation. A factory test, which is possible to give a new engine, is not sufficient to establish the polished bearing surfaces, which are so necessary to the proper performance and long life of an engine. Neither is there a quick way to force the establishment of good bearing surfaces. These can only be obtained by running a new engine carefully and under reduced speeds and loads for a short time, as follows:

First, be sure the engine is filled to the proper level with a good quality of engine oil, see "Grade of Oil" chart.

Before a new engine is put to its regular work, the engine should be operated at low speeds (1000 to 1200 R.P.M.) for an hour without load. The speed should then be increased gradually for two hours until the engine is up to governor speed.

The various bearing surfaces in a new engine have not been glazed, as they will be with continued operation, and it is in this period of "running in", that special care must be exercised, otherwise the highly desired glaze will never be obtained. A new bearing surface that has once been damaged by carelessness will be ruined forever.

## THEREFORE READ INSTRUCTIONS CAREFULLY

A copy of this manual is sent out with each engine. All points of operation and maintenance have been covered as carefully as possible but if further information is required, inquiries sent to the factory will receive prompt attention.

When writing the factory ALWAYS GIVE THE MODEL AND SERIAL NUMBER of engine referred to.

Extra copies of this manual are $1.00 each.

**WISCONSIN MOTOR CORPORATION**
**MILWAUKEE 46, WISCONSIN**

# BOOK OF INSTRUCTIONS

☆

# WISCONSIN

## FOUR CYLINDER ENGINE

MODEL

## VP4D

3½" Bore
4" Stroke
154 cu. in Disp.

★

NOTE: The Model **VP4D** engine replaces the **VP4** and is interchangeable. These engines are the same except that the **VP4D** has **STELLITE** exhaust valves and valve seats.

# INDEX


| | PAGE |
|---|---|
| Agricultural Engine Instructions | 17 |
| Air Cleaner | 8 |
| Battery Ignition–Wiring and Timing Diagram | 12 |
| Carburetor Adjustment | 10 |
| Carburetor Repair–See Manufacturer's Bulletin in Back of Manual. | |
| Choke | 10 |
| Clutch | 26 |
| Clutch Adjustment | 27 |
| Compression | 19 |
| Compression–Restoring | 16 |
| Cooling | 7 |
| Cross Section of Engine | 5 |
| Disassembling and Reassembling | 20 |
| Air Shrouding | 21 |
| Camshaft | 25 |
| Camshaft Gear | 22 |
| Carburetor and Manifold | 21 |
| Crankshaft | 25 |
| Cylinders | 23 |
| Cylinder Head | 21 |
| Flywheel | 20 |
| Gas Tank | 21 |
| Gear Cover | 22 |
| Idler Gear and Shaft | 22 |
| Oil Pan | 22 |
| Oil Pump | 22 |
| Piston Ring and Rod Clearance Chart | 24 |
| Piston Rings | 23 |
| Pistons and Connecting Rods | 22 |
| Distributor–Timing Marks | 12 |
| Distributor Timing–Engine Speed | 14 |
| Distributor Timing–Half Speed | 13 |
| Electric Starter and Generator | 15 |
| Firing Order | 15 |
| Fuel | 9 |
| Fuel Pump | 10 |
| Gasoline Strainer | 9 |
| General Information and Design | 7 |
| Governor–Adjustment | 26 |
| Horse Power | 7 |
| Hot Weather Operation | 17 |
| Ignition Switch | 10 |
| Illustration of Engine | 3–4 |
| Lubrication | 8 |
| Lubrication System | 7 |
| Lubrication System–Diagram | 6 |
| Magneto Breaker Point Adjustment | 10 |
| Magneto Ignition Spark | 11 |
| Magneto Repair–See Manufacturer's Bulletin in Back of Manual. | |
| Magneto Timing Diagram | 12 |
| Magneto Timing | 11 |
| Neon Lamp Timing | 15 |
| Oil–Grade of | 8 |
| Parts List Section | 29 |
| Reduction Unit | 26 |
| Safety Precautions | 16 |
| Safety Switch–High Temperature | 16 |
| Service Station Directory–See Back of Manual. | |
| Spark Plugs | 15 |
| Starting and Operating Instructions | 7 |
| Starting–Crank | 15 |
| Stopping Engine–Vapor Lock and Dieseling | 16 |
| Storage of Engine for Winter | 28 |
| Troubles–Causes and Remedies | 18 |
| Backfiring Through Carburetor | 20 |
| Ignition | 19 |
| Knocking | 19 |
| Missing | 19 |
| Overheating | 19 |
| Starting Difficulties | 18 |
| Stopping | 19 |
| Surging or Galloping | 19 |
| Valves–Grinding and Tolerances | 24 |
| Valve Tappets | 25 |
| Warm-Up Period–Overspeeding | 15 |

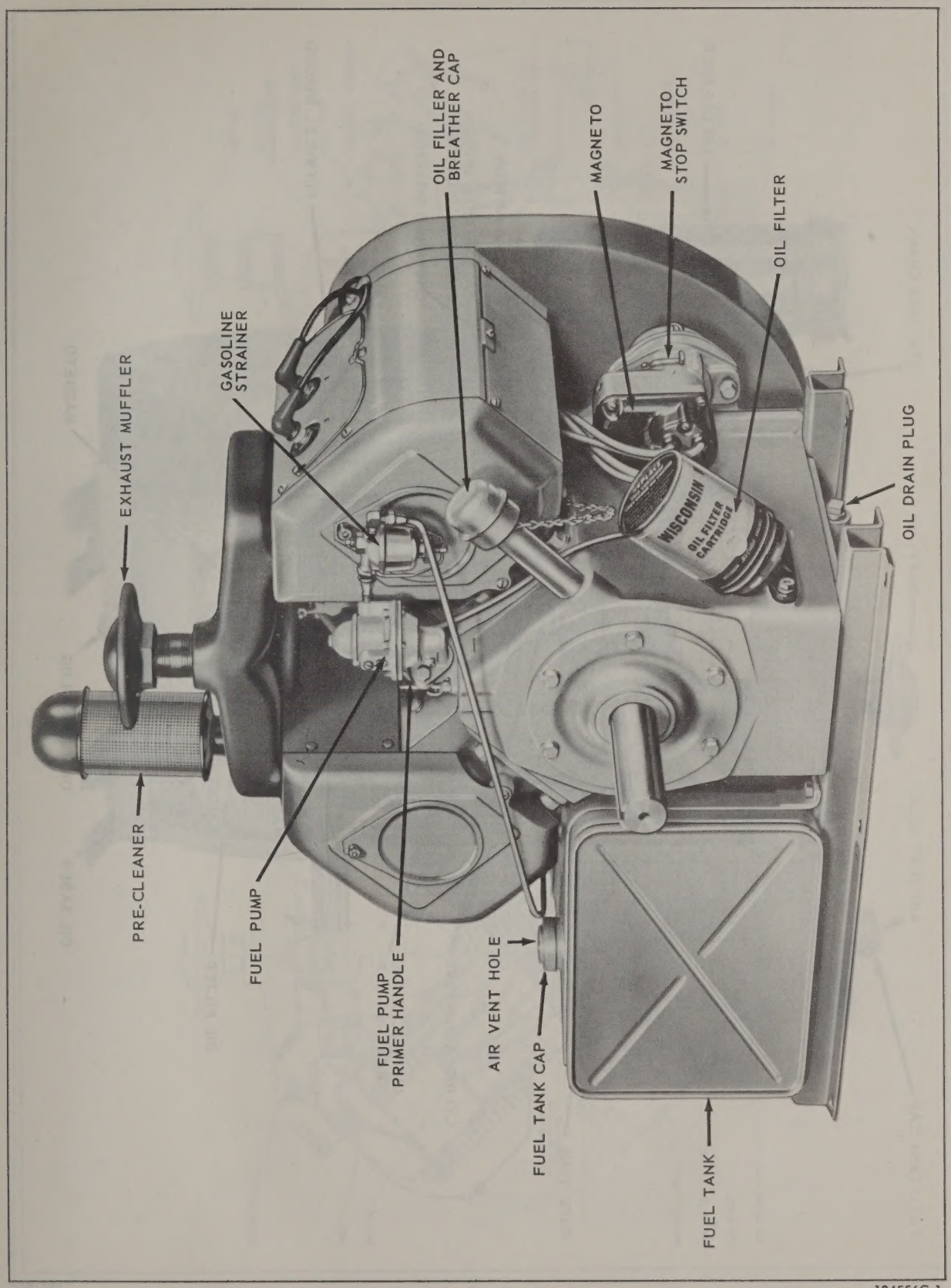


184556C-1

Fig. 1

**TAKE-OFF (Side Mount Tank) VIEW OF ENGINE**

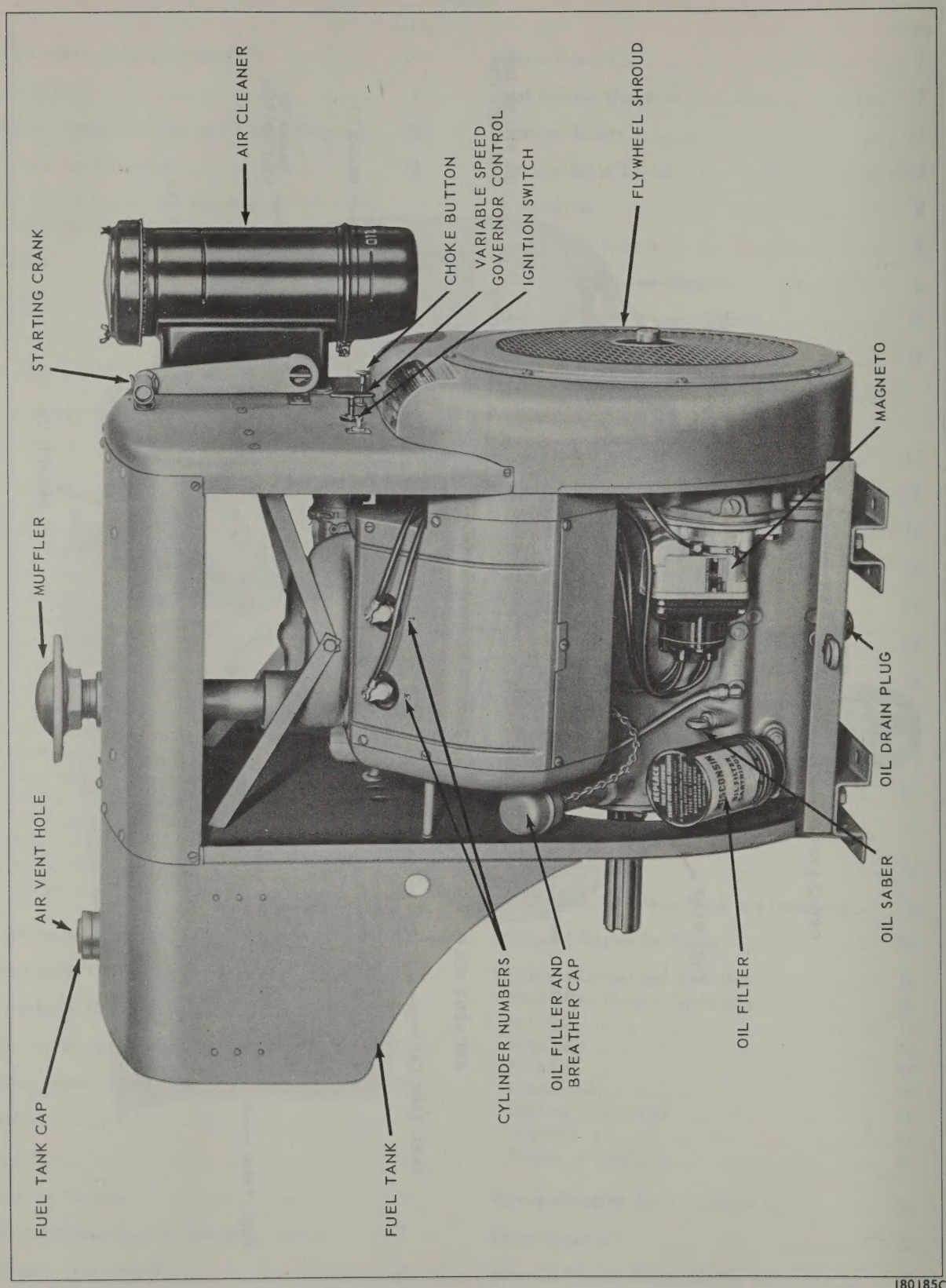


180185C

Fig. 2

**POWER UNIT FAN END VIEW OF ENGINE**

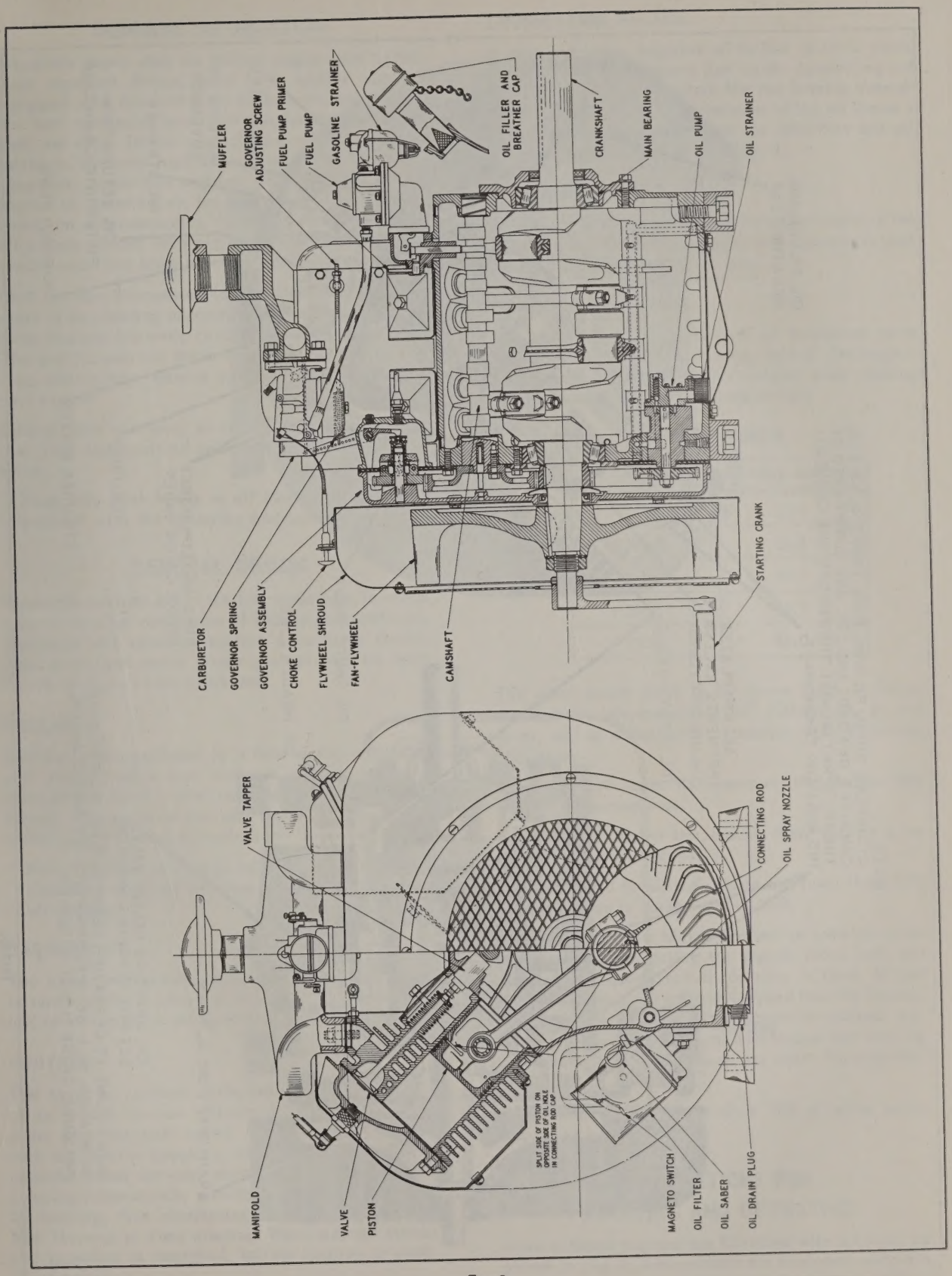


Fig. 3

**CROSS SECTION OF MODEL VP4D ENGINE**

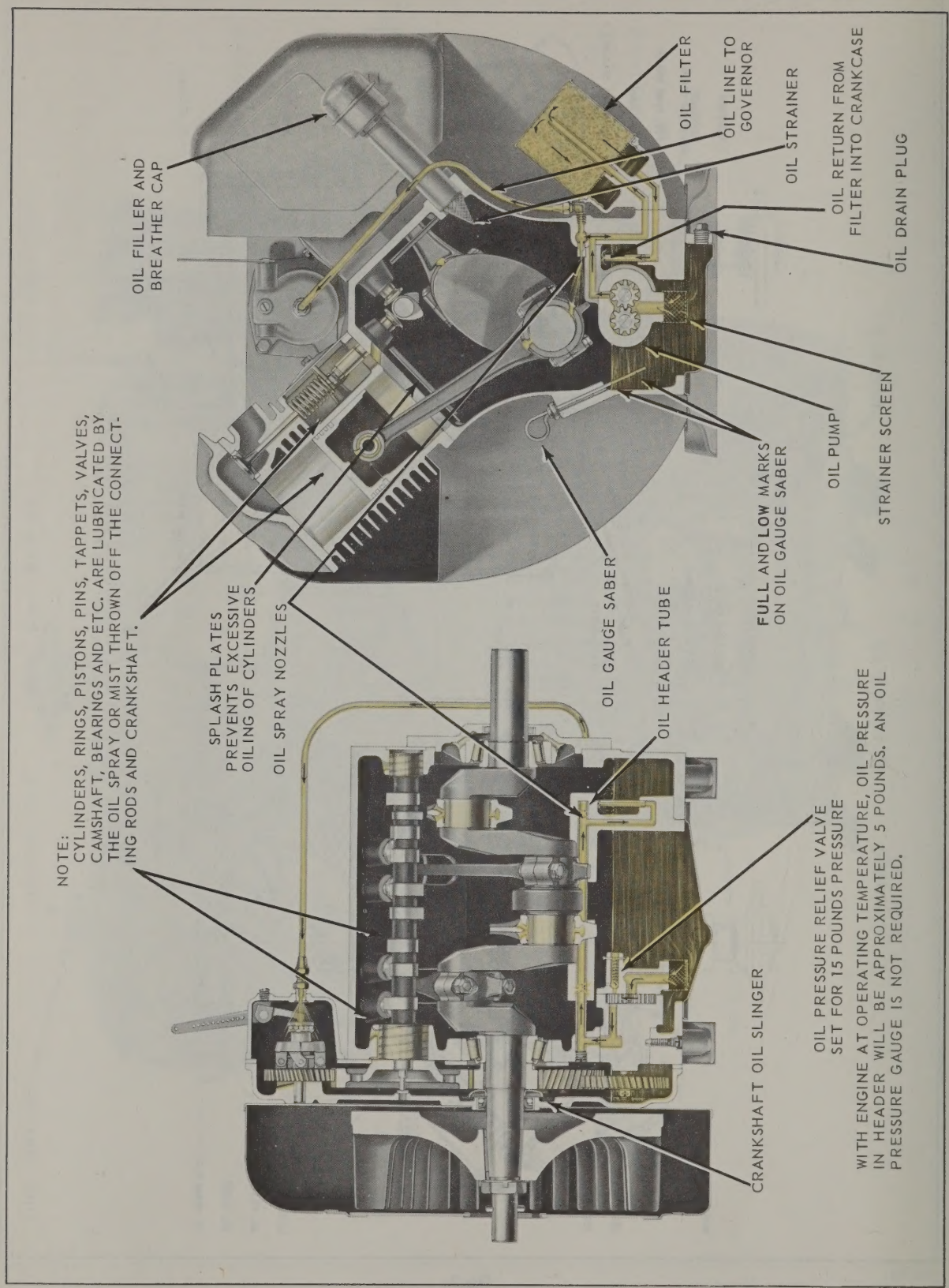


Fig. 4

**LUBRICATION SYSTEM**

## GENERAL INFORMATION

***Wisconsin*** heavy duty air cooled engines are of the most approved design, built in a modern factory, equipped with the latest machinery available. Only the best materials, most suitable for the particular part, are used. During production every part is subjected to the most rigid inspection, as are also the completely assembled engines. After assembly every engine is operated on its own power, for several hours, on a dynamometer. All adjustments are carefully made so that each engine will be in perfect operating condition when it leaves the factory.

Back of the Wisconsin Motor Corporation is fifty years of engineering experience in the design of gasoline engines for every conceivable type of service. The performance of these engines is proof of the long satisfactory service you too can expect from your engine.

Like all fine machinery an engine must be given regular care and operated in accordance with instructions.

***Keep this book handy at all times, familiarize yourself with the operating instructions.***

## GENERAL DESIGN

***Wisconsin*** engines are of the four cycle type, in which each of the four operations of suction, compression, expansion and exhaust requires a complete stroke. This gives one power stroke per cylinder for each two revolutions of the crankshaft.

### COOLING

Cooling is accomplished by a flow of air, circulated over the cylinders and heads of the engine, by a combination fan-flywheel encased in a sheet metal shroud. The air is divided and directed by ducts and baffle plates to insure uniform cooling of all parts.

***Never operate an engine with any part of the shrouding removed, because this will retard the air cooling.***

### CARBURETOR

The proper combustible mixture of gasoline and air is furnished by a balanced carburetor, giving correct fuel to air ratios for all speeds and loads.

### IGNITION

The spark for ignition of the fuel mixture is furnished by a high tension magneto driven off the timing gears at crankshaft speed. The magneto is fitted with an impulse coupling, which makes possible a powerful spark for easy starting. Also, the impulse coupling automatically retards the timing of the spark for starting, thus eliminating danger of a kick back from the engine when starting. When electric starter and generator is furnished, battery ignition is used, *See Page 15*.

### LUBRICATION SYSTEM

A gear type pump supplies oil to four nozzles which direct oil streams against fins on the connecting rod caps. Part of the oil enters the rod bearing through holes in the rods, and the balance of the oil forms a spray or mist which lubricates the cylinders and all other parts of the engine. *See Fig. 4.*

### GOVERNOR

A governor of the centrifugal flyball type controls the engine speed by varying the throttle opening to suit the load imposed upon the engine.

### ROTATION

The rotation of the crankshaft is clockwise when viewing the flywheel or starting end of the engine. This gives counter-clockwise rotation when viewing the power take-off end of the crankshaft.

## HORSE POWER

| R.P.M. | HORSE POWER |
|---|---|
| 1400 | 23.5 |
| 1600 | 26.8 |
| 1800 | 29.0 |
| 2000 | 30.2 |
| 2200 | 31.0 |

The horse power given in the above chart, is for an atmospheric temperature of 60° Fahrenheit, at sea level, and at a Barometric pressure of 29.92 inches of mercury.

For each inch lower Barometer reading deduct 3½% from above horsepower.

For each 10° higher temperature there will be a reduction in horsepower of 1%.

For each 1000 ft. altitude above sea level there will be a reduction in horsepower of 3½%.

The friction in new engines cannot be reduced to the ultimate minimum during the regular block test, but engines are guaranteed to develop at least 85 per cent of maximum power when shipped from the factory. The power will increase, as friction is reduced, during a few days of operation. The engine will develop at least 95% of power shown on chart when friction is reduced to a minimum.

For continuous operation allow 20% of horse power shown, as a safety factor.

## INSTRUCTIONS FOR STARTING AND OPERATING

Some of these engines are furnished with a house, as shown in *Fig. 2*, while others are furnished without a

house, as shown in *Fig. 1.*

***On engines with a house the side doors should always be removed when operating.***

This is to give better circulation of air for cooling the engine.

## LUBRICATION

Before starting the engine, fill the oil base with good gasoline engine oil. Fill through the breather pipe ***up to FULL line on oil gauge sabre,*** *see Fig. 4.* On most of these engines the sabre is on the magneto side, except when some accessories interfere then it is located on the opposite side.

Too much emphasis cannot be given to the matter of oil selection. High grade oil of the body suited to the requirements of your engine is the most important single item in the economical operation of the unit, yet it is the cheapest item of operating cost. Select your oil solely on quality and suitability—never on price—for no one thing is so sure to bring about unsatisfactory performance and unnecessary expense as incorrect lubrication.

High-grade, highly refined oils corresponding in body to the S. A. E. (Society of Automotive Engineers) Viscosity Numbers listed in the following chart will prove economical and assure long engine life.

***Important:*** S. A. E. Viscosity Numbers classify oils in terms of body only, without consideration of quality or character, therefore we list certain grades of ***Mobiloil*** as typical examples of lubricants possessing the qualities we believe desirable in oils for ***Wisconsin*** engines. We plainly state that these grades of ***Mobiloils*** are listed because of their recognized quality and world-wide distribution. ***There are other high quality oils on the market that are equally satisfactory for Wisconsin engines.***

### GRADE OF OIL

| SEASON OR TEMPERATURE | GRADE OF OIL | EXAMPLE |
|---|---|---|
| Spring, Summer or Autumn +120°F to + 40°F | SAE 30 | Mobiloil 'A' |
| Winter + 40°F to + 5°F | SAE 20 | Mobiloil 'Arctic' |
| Winter + 5°F to − 20°F | SAE 10W | Mobiloil 'Arctic Special' |
| Crankcase Capacity | | 5 Qts. |

Follow summer recommendations in winter if engine is housed in warm building.

***Check oil level every 8 hours of operation.***

***The old oil should be drained and fresh oil added after every 50 hours of operation.***

To drain oil remove drain plug. *See Fig. 4.* Oil should be drained while engine is hot, as it will then flow more freely.

At engine operating temperature the oil pressure will be about 4 to 5 pounds per square inch. Due to this low pressure system an oil pressure gauge is not required. When the engine is cold the pressure will be higher and a relief valve is fitted to the oil pump so that under these conditions the maximum pressure will be limited to 15 pounds.

## OIL FILTER

A by-pass type oil filter is furnished on these engines *see Fig. 4,* except in a few cases where the use of other accessories prevents the fitting of the oil filter. The oil filtering cartridge should be replaced after every other oil change. If operating conditions are extremely dusty, replace cartridge after every oil change. *See Fig. 5.*

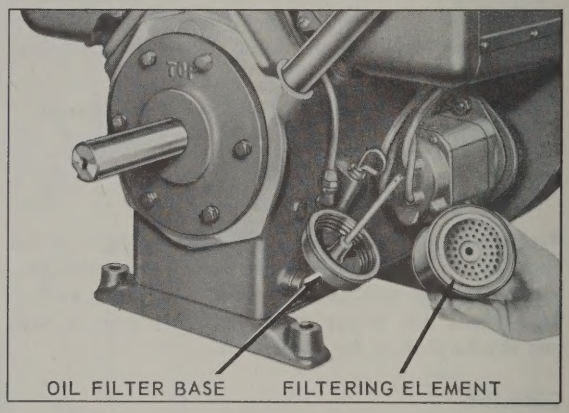


Fig. 5 104810C

## AIR CLEANER

The air cleaner is an essential accessory, filtering the air entering the carburetor, and thereby prolonging the life of the engine.

Remove the bowl from the air cleaner. *See Fig. 6* and *Fig. 7.* Fill the bowl to oil level line with the same grade of oil as used in the crankcase. Detailed instructions are printed on the air cleaner.

The air cleaners must be serviced frequently, depending on the dust conditions where the engines are operated. When the oil in the bowl becomes dirty it should be removed and replaced with new oil. This servicing will vary from a few days of operation in comparatively clean conditions to twice a day in dusty conditions.

***Operating the engine under dusty conditions without oil in the air cleaner or with dirty oil, may wear out cylinders, pistons, rings and bearings in a few days time, and result in costly repairs.***

When a collector type precleaner is used on top of the air cleaner, the glass jar should be emptied of accumulated dirt frequently, depending on dust conditions. *See Fig. 7.* ***Do not use oil or water in glass***

104577-C

Fig. 6

Fig. 7 71732-C

***precleaner jar. This should be kept dry.***

Daily attention to the air cleaner is one of the most important considerations in prolonging engine life.

## FUEL

These engines are furnished either with gravity feed tanks mounted above the level of the carburetor, or with side mount tanks or tanks mounted below the engine. In the latter two cases, fuel pumps are furnished on the engine, to pump the fuel up to the carburetor.

The fuel tank should be filled with a good quality of gasoline free from dirt and water. Some of the poorer grades of gasoline contain gum which will deposit on valve stems, piston rings, and in various small passages in the carburetor and thus cause serious trouble in operating, and in fact might prevent the engine from operating at all.

***Use only reputable, well known brands of gasoline of the REGULAR GRADE. Fuels with the lowest possible lead content are best.***

Gasoline engines should not be operated on fuel with an octane rating below 74 (Research Method). Fuel with a lower octane rating will cause detonation, and if operation is continued under this condition, severe damage will result to the engine. The cylinders and pistons will be scored, head gaskets blown out, bearings will be damaged, too.

Be sure to open the gasoline shut-off valve below the fuel tank when gravity feed tanks are used. Also be sure air vent hole in fuel tank cap is open, otherwise gas cannot flow to the carburetor.

## GASOLINE STRAINER

The gasoline strainer, at the bottom of the fuel tank on power units, or mounted to the fuel pump on open engines, is very necessary to prevent sediment, dirt and water from entering the carburetor and causing trouble or even complete stoppage of the engine. This strainer has a glass bowl and should be inspected frequently, and cleaned if dirt or water is present. To remove bowl, first shut off fuel valve, then loosen the knurled nut below the bowl and swing the wire bail to one side. After cleaning bowl and screen, replace the parts, being sure the gasket is in good condition, otherwise use a new gasket. *See Fig. 8.*

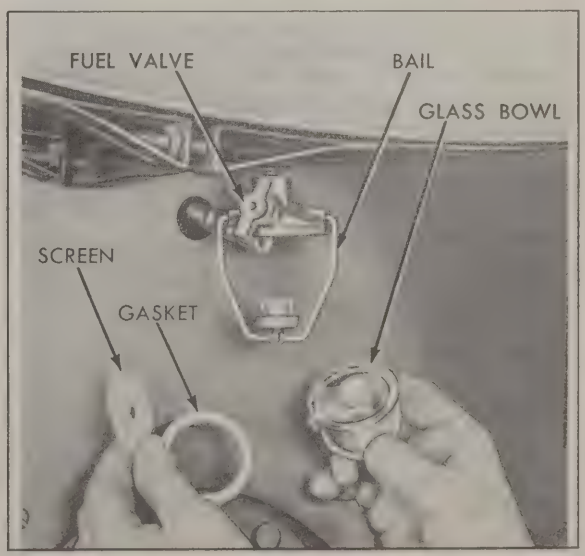


Fig. 8 71051C

## FUEL PUMP

On engines equipped with fuel pumps, when starting the first time, or when engines have been out of operation for a while, the hand primer lever on the fuel pump should be used before attempting to start, so that fuel may be pumped into the dry carburetor, otherwise starting would be very difficult. When priming by hand lever, a distinct resistance of the fuel pump diaphragm should be felt. If this is not the case, the engine should be turned over a revolution so that the fuel pump cam will be rotated from its upper position which would prevent hand priming. This hand lever should be given about 20 to 30 strokes, depending on how much fuel, if any, there is in the carburetor float chamber. *See Fig. 9.* When the carburetor is full, the hand primer lever will move more easily. Instructions for fuel pump maintenance and repair are located in back of this manual.

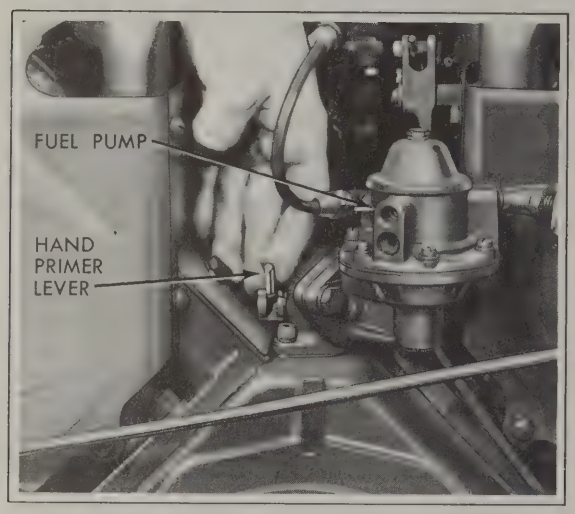


Fig. 9 83622C

## CHOKE

Before starting a cold engine, close the choke on the carburetor by pulling out the choke button at the flywheel end of the engine. *See Fig. 2.* When the engine is started, the choke should be opened gradually as the engine warms up. More choking is necessary when starting in cold weather than in warm weather. If the engine is warm, very little choking is necessary. The operator will soon gain experience in how much choking is necessary. The choke button should always be pushed in after the engine is warmed up.

The choke is closed when button is pulled out, and open when button is pushed in.

## CARBURETOR ADJUSTMENT

The main metering jet in the carburetor is of the fixed type, that is, it requires no adjustment. The idle needle should be adjusted for best low speed operation, while carburetor throttle is closed by hand. For illustrations and more information, see Carburetor Manufacturer's Instruction Bulletin in back of this manual.

## IGNITION SWITCH

Magneto ignition is standard on these engines with a lever type switch on the side of the magneto which is always in the **on** or running position, except when depressed for stopping the engine. *See Fig. 1.*

On engines with a house, the ignition switch is on the outside of the house at the flywheel end. *See Fig. 2.* To run engine with magneto ignition, this switch is pushed in; with battery ignition, it is pulled out.

## MAGNETO BREAKER POINT ADJUSTMENT

Magnetos are properly adjusted before leaving factory. The breaker points on the Fairbanks-Morse magneto and on the Wico magneto should be .015" at full separation. If the spark becomes weak after continued operation, it may be necessary to readjust these points. To do this first remove the end cover on the magneto. *See Fig. 10* which shows the end cover of the Fairbanks-Morse magneto removed. The crank-

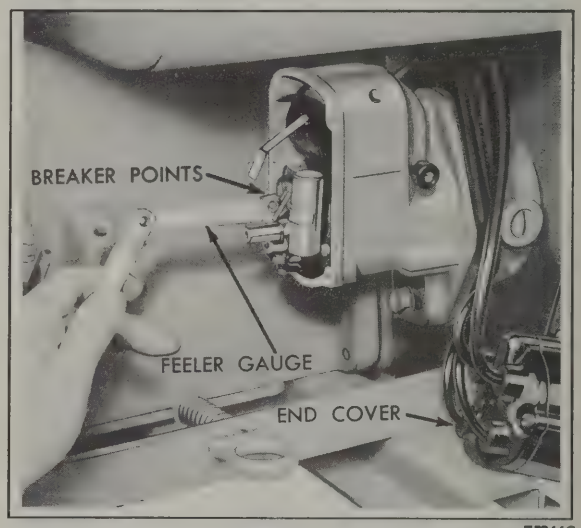


Fig. 10 75266C

shaft should then be rotated with the starting crank, (this also rotates the magneto), until the breaker points are wide open. The opening or gap should then be measured with a feeler gauge and if necessary reset as shown in *Fig. 11.* To readjust points, first loosen the locking screws on the contact plate enough so that the plate can be moved. Insert the end of a small screw driver into the adjusting slot at the bottom of the contact plate and open or close the contacts by moving the plate until the proper opening is obtained. *See Fig. 11.* After tightening the locking screws, recheck breaker point gap to make sure it has not changed. If it is found that the breaker points have become rough, they should be smoothed with a breaker point file before the above adjustments are made. Replace magneto end cover carefully so that it will seal properly. Do not force cover screws too tightly otherwise cover may crack. For further information see Fairbanks-Morse or Wico Magneto Maintenance Instructions in back of this manual.

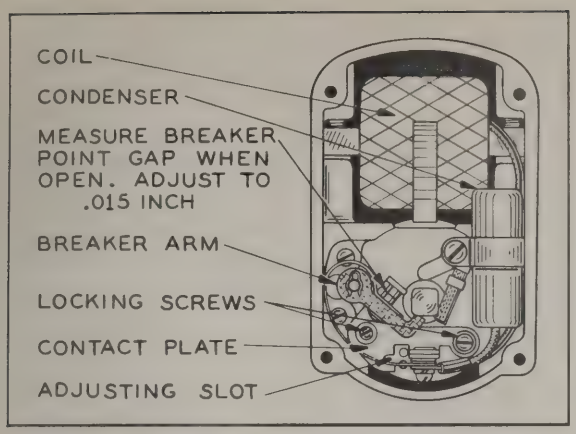


OPEN END VIEW OF FAIRBANKS-MORSE MAGNETO

Fig. 11

## MAGNETO IGNITION SPARK

If difficulty is experienced in starting the engine or if engine misses firing, the strength of the ignition spark may be tested by disconnecting the No. 1 ignition cable from the spark plug and holding the terminal 1/8 inch away from the air shroud or any other metal part of the engine, as shown in *Fig. 12.* Turn the engine over slowly by the starting crank two complete revolutions and watch for the spark discharge which should occur during the cycle, at the instant the impulse coupling on the magneto snaps. Repeat this check with each of the other ignition cables. If there is a weak spark, or none at all, check breaker point opening as mentioned in preceding paragraph under *'Magneto Breaker Point Adjustment'*. If this does not remedy the trouble, it may be necessary to install a new condenser. See Magneto Manufacturer's Maintenance Instructions in back of this manual.

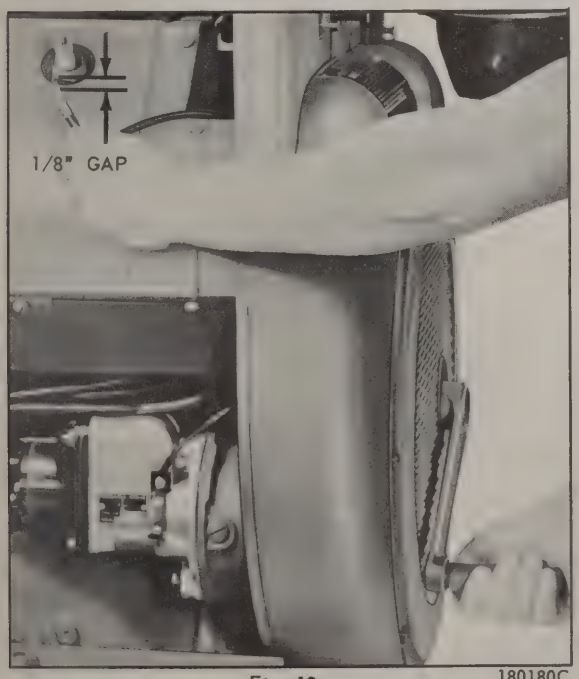


Fig. 12 180180C

## MAGNETO TIMING

The magneto is properly timed at the factory, but if for any reason it is necessary to retime the magneto, the following instructions will be helpful.

First remove the screen over the flywheel air intake opening by taking out the six screws holding the screen in place. This will expose the timing marks on flywheel shroud for timing magneto. *See Timing Diagram, Fig. 13.*

Next remove the spark plug from No. 1 cylinder. Then turn engine over slowly with the starting crank until the compression in this cylinder blows the air out of the spark plug hole.

The flywheel is marked with the letters 'DC' near one of the air circulating vanes. This vane is further identified by an 'X' mark cast on the end. *See Diagram, Fig. 13.* When the air blows out of the No. 1 spark plug hole, continue turning the starting crank until the edge of the marked vane on flywheel is on line with the mark on shroud as shown on *Timing Diagram.* Then leave flywheel in this position. At this point No. 1 and No. 4 cranks are vertical. The keyway for mounting the flywheel is also on top.

The magneto should then be fitted to the engine so that the marked tooth on the magneto gear is visible through the opening in timing gear housing as shown on *Timing Diagram, Fig. 13.* The distributor cap on the magneto is numbered from 1 to 4. The leads from the magneto should be connected to spark plug of like numbers.

When the magneto is properly timed the impulse coupling will snap when the 'DC' and 'X' marked vane of the flywheel, lines up with the marks on the flywheel shroud which indicate the centerline of the cylinders. This can be checked by turning crankshaft over slowly by hand.

The proper spark advance is 25°. For checking timing with a neon light, the running spark advance is indicated by a mark on the flywheel shroud, 25° before centerline of No. 1 and No. 3 cylinders. *See Fig. 13.* The end of the 'X' marked vane should be whitened with chalk or paint for this operation.

## DISTRIBUTOR–BATTERY IGNITION

When these engines are furnished with electric starter and direct mounted generator, battery ignition is used instead of magneto ignition. The distributor is mounted to the end of the generator.

Two types of distributors, either the ***Engine Speed*** as illustrated in *Fig. 21* or the ***Half-Speed*** distributor, *Fig. 17,* are furnished. The ***Half-Speed*** distributor, which offers greater breaker point life, replaces the ***Engine Speed*** distributor wherever sufficient installation clearances makes this possible.

These engines are properly timed at the factory, but the following instructions are given as a help in

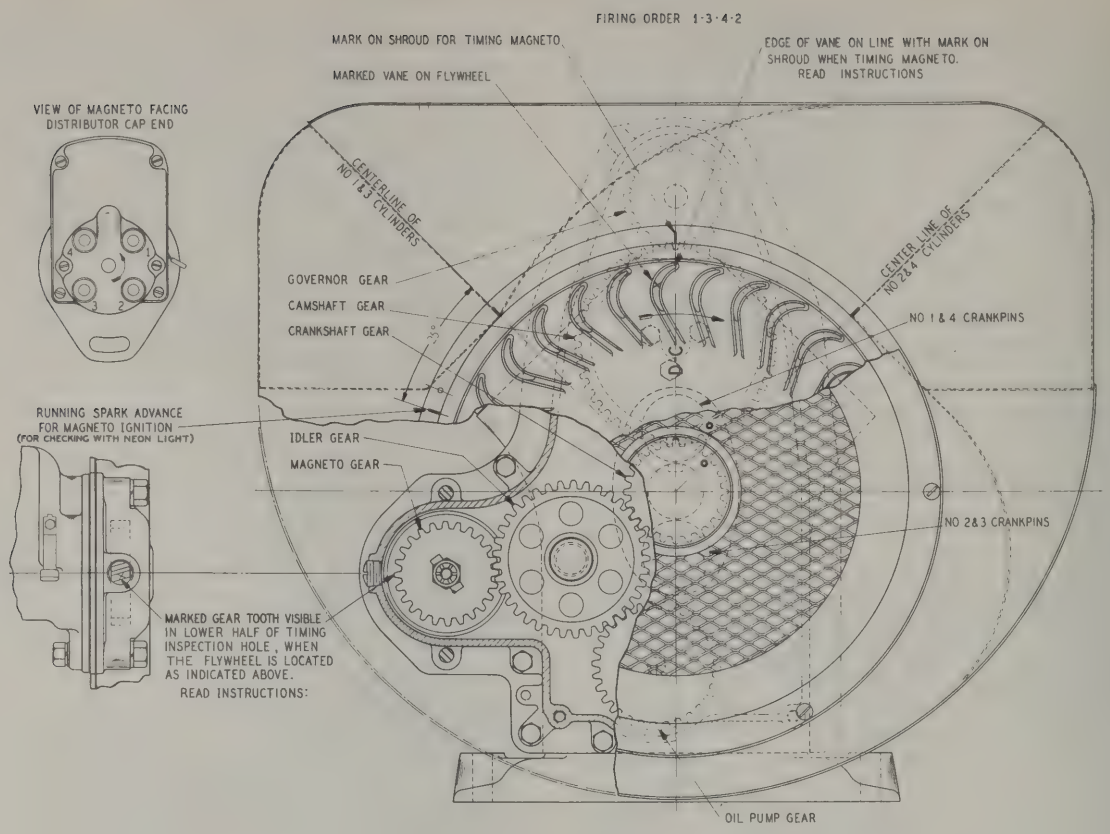


Fig. 13

**MAGNETO TIMING DIAGRAM**

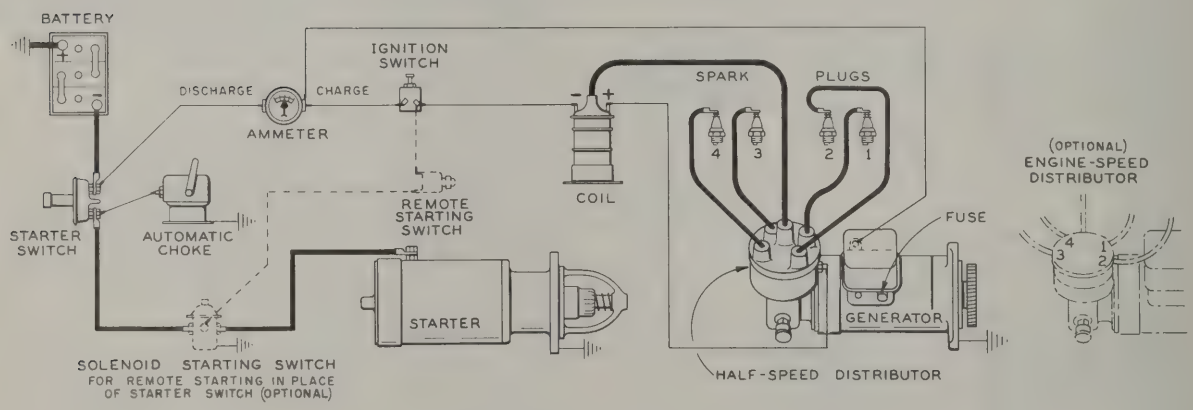


Fig. 14

**BATTERY IGNITION—WIRING AND TIMING DIAGRAM**

retiming, if this becomes necessary. The generator drive gear does not have to be timed to the gear train as timing is set by means of the distributor gear. The proper spark advance for normal speeds is 25°, the same as for magneto ignition.

## TIMING MARKS

Remove the screen over the flywheel air intake opening by taking out the screws holding the screen in place. This will expose the timing marks on the flywheel shroud, also the ***Vane*** on flywheel, marked by an **'X'** and the letters **'DC'**. *See Fig's. 15* and *18*. Next, remove the spark plug from No. 1 cylinder and turn the engine over slowly by the starting crank, at the same time holding a finger over the spark plug hole, so that the compression stroke can be deter-

mined by the air blowing out of the hole. *Continue with instructions for* ***Half-Speed Distributor Timing*** *or* ***Engine Speed Distributor Timing*** *whichever is applicable.*

## HALF-SPEED DISTRIBUTOR TIMING

The YF-10 (Auto-Lite No. IAD-4036A) distributor is of the automatic advance type and it is driven off an engine speed shaft through a pair of two to one ratio helical gears, thus giving the distributor ***one half engine speed*** in a counter-clockwise direction when viewed from above. The automatic advance is 14° in the distributor, equal to 28° on the crankshaft which is the full amount of spark advance required. The distributor is fully advanced at 1800 R.P.M. of the engine.

Upon reaching the compression stroke, as determined in *'Timing Marks'* paragraph, continue turning the starting crank until the leading edge of the ***Marked Vane*** on the flywheel is in line with the ***Centerline Mark*** on the flywheel shroud of the No. 1 cylinder. The No. 1 piston is on top dead center in this position. *See Fig. 15.*

Remove the upper half of the distributor body by disengaging snap springs. The ***centerline*** of the ***distributor rotor*** should be in line with the ***right hand edge*** of the ***notch*** in the distributor housing. No. 1 cylinder is ready to fire, in the retarded timing position, when the distributor rotor is in this position, as shown in *Fig. 16.* If the distributor rotor is not in the above mentioned position, withdraw the entire distributor from the generator. Remove the distributor rotor in order to take off the dust cover from the distributor body, which will expose the breaker points. Mount rotor back on distributor shaft. Assemble distributor to generator with the ***centerline*** of the ***distributor rotor*** in line with the ***right hand edge*** of the ***notch*** in the distributor housing as shown in *Fig. 16,* and the ***primary terminal*** pointing toward the top edge of the generator ***regulator.*** *See Fig. 17.* Be sure that the ***advance arm lockscrew,*** *Fig. 16,* which is mounted to the ***distributor clamp*** is tight, as a manual spark advance is not used with these engines.

With the ***advance arm clamp screw*** loose, turn the distributor body slightly in a counter-clockwise rotation so that the breaker points are firmly closed. Then turn the distributor body in a ***clockwise*** rotation until the ***breaker points*** are just ***beginning to open,*** *see Fig. 16.* At this point a slight resistance can be felt as the breaker point cam strikes the breaker point arm. Tighten ***advance arm clamp screw.*** The No. 1 cylinder is now ready to fire in the retarded position, with the centerline of the ***distributor rotor*** in line with the ***right hand edge*** of the ***notch*** in the distributor body as shown in *Fig. 16.*

The breaker point gap should be .018 to .022 inches. This opening should be checked before the distributor body is set, otherwise any adjustment made to the breaker point opening will change the ignition advance. Replace distributor dust cover. If care is

## HALF-SPEED DISTRIBUTOR TIMING PHOTOS

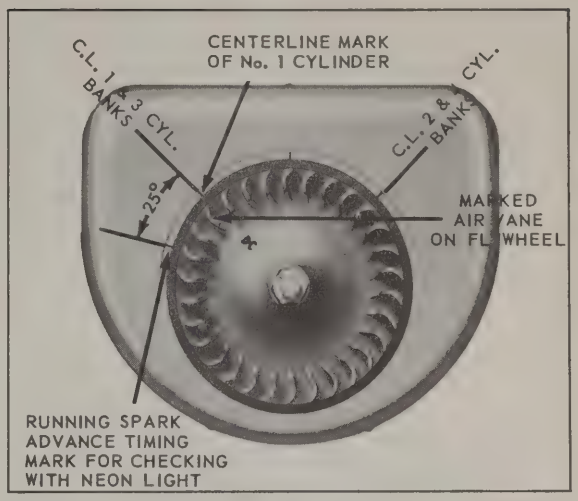


Fig. 15 78399C-1A

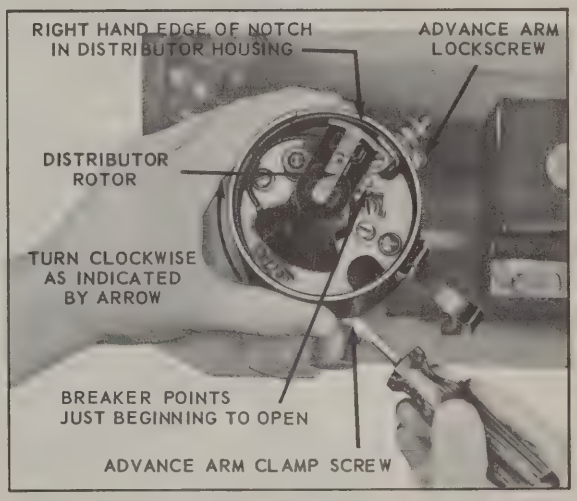


Fig. 16 195132C

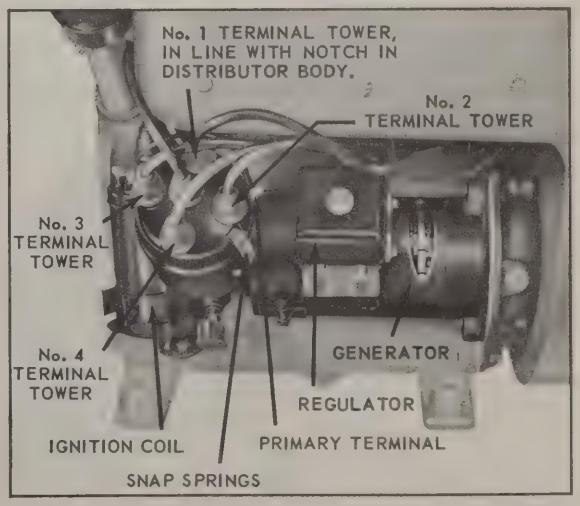


Fig. 17 195133C

## ENGINE SPEED DISTRIBUTOR TIMING PHOTOS

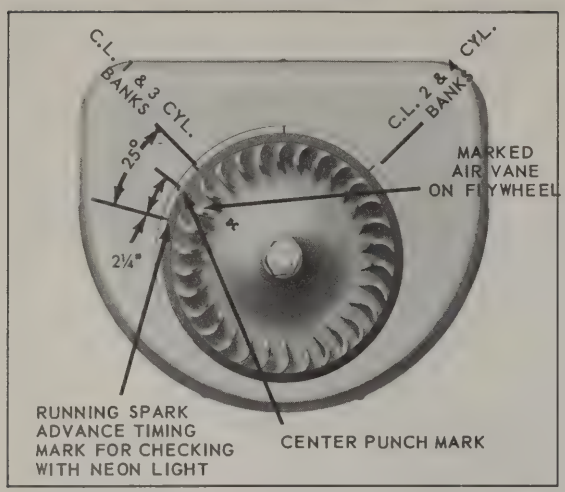


Fig. 18 78399C-1

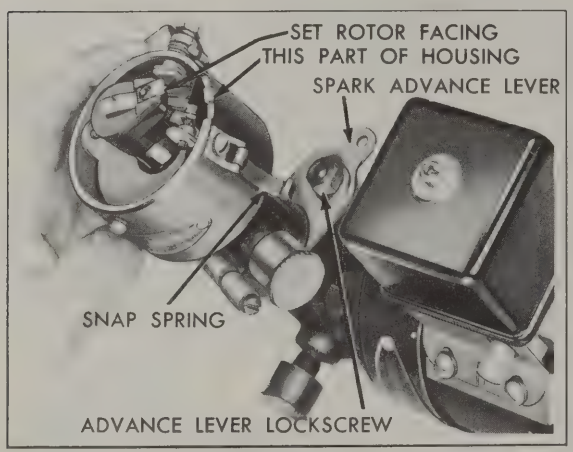


77930C

Fig. 19

77931C

Fig. 20

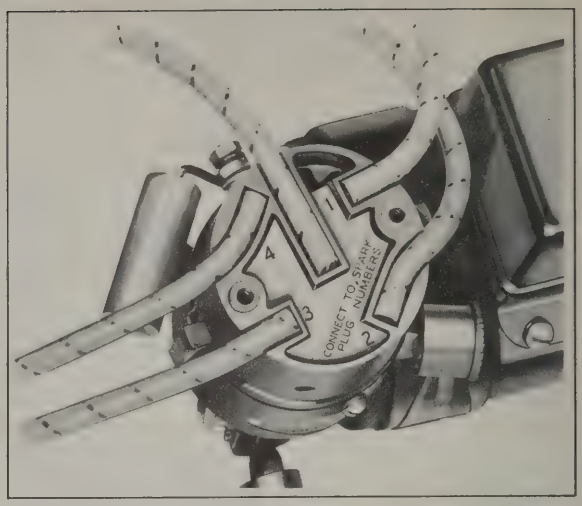


Fig. 21 77932C

exercised in the above operations, the spark timing should be accurate enough for satisfactory operation, however, checking spark advance with a neon lamp, as described in *'Neon Lamp Timing'* is recommended.

The four ignition cables from the distributor should be connected to the proper spark plugs. The No. 1 terminal tower on the distributor is in line with the notch in the distributor body. The terminal sequence is **1-3-4-2** in a counter-clockwise rotation. *See Fig 17.* The cylinder shroud covers are marked for identification.

## ENGINE SPEED DISTRIBUTOR TIMING

The ***YF-6*** (Auto-Lite No. IGW-4159A) ***Engine Speed*** distributor has an automatic advance of 15°, and is mounted to the engine with an additional advance of 10°, to give a total of 25°, which is the running spark advance of the engine.

After determining the compression stroke of No. 1 cylinder as described in *'Timing Marks'* paragraph, continue turning starting crank until the leading edge of the ***Marked Vane*** on the flywheel is in line with the ***Center Punch Mark*** on the flywheel shroud. *See Fig. 18.* This will leave the No. 1 piston, 10° before top dead center, which is the amount of spark advance at low speeds (below 300 R.P.M.) before the distributor automatic advance begins to take hold.

Remove upper half of distributor body by disengaging snap springs.

The ***distributor rotor*** should line up with ***center*** of the ***two notches*** in the distributor housing. *See Fig. 19.*

If the rotor is not in this position, withdraw entire distributor from the generator, and re-engage the gears at the bottom of the distributor in a new position so rotor will be located properly. Be sure that the ***advance lever lockscrew***, *Fig. 19*, which is mounted to the ***distributor clamp*** is tight, as a manual spark advance is not used with these engines.

With the ***distributor clamp screw*** loose, first turn the

distributor body slightly in a counter-clockwise direction until the breaker points are firmly closed. Then turn the distributor body in a ***clockwise*** direction until the ***breaker points*** are just ***beginning to open***, *see Fig. 20.* At this point a slight resistance can be felt as the breaker point cam strikes the breaker point arm. The ***distributor clamp screw*** should then be tightened, so the distributor will be held firmly in this position. The breaker point gap should be .018 to .022 inches. This opening should be checked before the distributor body is set, otherwise any adjustment made to the breaker point opening will change the ignition advance adjustment. If care is exercised in the above operations the spark timing should be accurate enough for satisfactory operation, however checking spark advance with a neon lamp, as described in *'Neon Lamp Timing'*, is recommended.

The four ignition cables from the distributor should be connected to the same number spark plug as the number on the distributor. *See Fig. 21.* The center cable from the distributor is connected to the ignition coil.

## NEON LAMP TIMING

The timing should be checked with a neon lamp connected in series with No. 1 spark plug. Chalk or paint the end of the ***'X'*** marked vane on the flywheel, white. Then with the engine operating at 1800 R.P.M. or over, allow the flash from the neon lamp to illuminate the whitened vane. At the time of the flash, the leading edge of the vane should line up with the ***running spark advance timing mark*** on the flywheel shroud. *See Fig. 15* or *Fig. 18.* If it does not, the ***advance arm clamp screw*** should be loosened as shown in *Fig. 16* for the ***Half-Speed Distributor***, or *Fig. 20* for the ***Engine Speed Distributor***, and the distributor body turned slightly clockwise or counter-clockwise, as required, until the ***advance timing mark*** and the ***white vane*** coincide. Be sure ***advance arm clamp screw*** is then carefully tightened. If the engine is running below 1800 R.P.M. when timing, the automatic advance in the distributor will not be fully advanced and the timing would not be accurate.

Be sure and mount flywheel screen after correct timing has been accomplished.

Every 50 hours of operation, the grease cup at the rear of the generator, in the distributor gear housing, should be given one turn. Use a high melting point grease. Add 3 to 5 drops of medium engine oil to the oiler pad in the distributor base. Do not over lubricate, otherwise grease may enter the generator or distributor and cause trouble.

## FIRING ORDER

The firing order of the cylinder is ***1-3-4-2.*** Number 1 cylinder is the one nearest to the flywheel in the left bank of cylinders, when viewed from the flywheel end of the engine. Number 3 cylinder is the other cylinder in this bank. Number 2 cylinder is the one nearest to the flywheel in the right bank of cylinders and Number 4 is the other cylinder in this bank. The cylinders are numbered from 1 to 4 on the air shroud near the spark plugs. *See Fig. 2.* The flywheel end of the engine is designated the front end, and the power take-off end, the rear end of the engine.

As these engines are of the V type, the interval between firing of the cylinders is as follows: Crankshaft rotation between firing of cylinders No. 1 and No. 3 is 180°; between No. 3 and No. 4 is 270°; between No. 4 and No. 2 is 180° and between No. 2 and No. 1 is 90°.

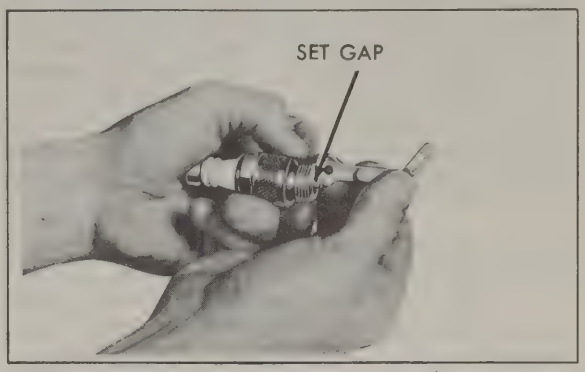


Fig. 22 104713C

## SPARK PLUGS

The spark plug gap should be thirty thousandths (.030) of an inch, and plugs should be kept clean both inside and out. *See Fig. 22.* If the porcelain insulator is cracked, replace with a new plug of correct heat range, like Champion No. 8 Com., AC No. 85 or equal. The spark plug thread is 18 millimeter. Be sure to use a good gasket under the spark plug. Tighten spark plugs, 25 to 30 foot pounds torque.

## ELECTRIC STARTER AND GENERATOR

The electric starter and generator are optional accessories, furnished only upon request when engine is purchased. They cannot be mounted in the field unless provisions were made when engine was purchased. The starter and generator are products of the Electric Auto-Lite Company, Toledo, Ohio, and it is recommended that all repairs for this accessory be done through their authorized Service Stations. For wiring diagram, *see Fig. 14.* Battery is not furnished by engine manufacturer.

## STARTING

The engine, less electric starter, is started by engaging the crank and pulling up briskly on the crank in a clockwise direction. ***Do not*** attempt to spin the engine with the starting crank. If the engine does not start on the first pull up of the crank, re-engage the crank and repeat the operation.

## WARM-UP PERIOD

When starting a gasoline engine for its days work, the engine should be allowed to warm up to operating temperature, before the load is applied. This requires

only a few minutes of running of the engine at moderate speed.

***Racing an engine or gunning it,*** to hurry the warm-up period, ***is very destructive*** to the polished wearing surfaces on pistons, rings, cylinders, bearings, etc. as the proper oil film on these various surfaces cannot be established until the oil has warmed up and become sufficiently fluid. This is especially important on new engines and in cool weather.

***Racing an engine by disconnecting the governor,*** or by doing anything to interfere with the governor control of the engine, ***is extremely dangerous.*** Quite naturally the operator of the engine desires to get all possible power out of an engine, and the engine manufacturer does his best to supply this want, but if all of this power is used merely to speed up the engine, without any load being imposed upon it, dangerously high speeds will result.

The governor is provided as a means for controlling the engine speed to suit the load applied, and also as a safety measure to guard against excessive speeds, which not only overstrain all working parts, but which might cause wrecking of the engine, and possible injury to bystanders.

All parts of the engine are designed to safely withstand any speeds which might normally be required, but it must be remembered that the stresses set up in rotating parts, increase with the square of the speed. That means that if the speed is doubled the stresses will be quadrupled, and if the speeds are trebled the stresses will be nine times as great.

***Strict adherence to the above instructions cannot be too strongly urged, and greatly increased engine life will result as a reward for these easily applied recommendations.***

## RESTORING COMPRESSION

On a new engine or on one which has been out of operation for some time, the oil may have drained off the cylinder so that compression will be weak. This may cause difficulty in starting. To remedy this condition, remove the spark plugs and pour about a fluid ounce of crankcase oil through the spark plug hole into each cylinder.

Turn the engine over several times with the starting crank to distribute the oil over the cylinder wall. Then replace the spark plugs and compression should be satisfactory.

## STOPPING ENGINE

Engines, less house, have a lever type stop switch on the side of the magneto. On these, to stop engine, depress lever and hold down until engine stops. *See Fig. 1.* Power units have an ignition switch on front panel of house as shown in *Fig. 2.* On these, to stop engine with magneto ignition, pull out the switch; with battery ignition, push in the switch.

If the engine has been running hard and is hot, do not stop it abruptly from full load, but remove the load and allow engine to run idle at 1000 to 1200 R.P.M. for three to five minutes, depending on how hot the engine has been. This will reduce the internal temperature of the engine much faster than stopping the engine, and of course the external temperature, including the manifold and carburetor will also reduce faster, due to the air circulation from the flywheel.

Two main troubles resulting from abrupt shutting off a hot engine are ***vapor lock*** and ***dieseling.*** Vapor lock will prevent the flow of fuel in the fuel lines and carburetor passages, which will result in hard starting of the engine. This can be overcome by choking the engine when cranking or waiting until the engine has cooled off sufficiently to overcome the vapor lock.

Dieseling, is caused by the carbon and lead deposits in the cylinder head being heated up to such an extent that they continue to fire the engine and keep it running after the ignition has been shut off. By idling the engine, as previously mentioned, the carbon and lead deposits cool off, break up and will blow out thru the exhaust. Have the carburetor throttle partially open when engine is shut off.

## HIGH TEMPERATURE SAFETY SWITCH

As a safety precaution, some engines have a high temperature safety switch mounted on the cylinder head near the No. 2 spark plug, which will automatically stop the engine when head temperatures rise beyond a safe degree.

This switch is set by the manufacturer to operate at the correct temperature. Consequently, the adjusting screw on the top of the switch should not be tampered with. If the cylinder head temperature at the spark plug reaches 645°F., the switch will automatically short out the magneto, or distributor, and stop the engine. A waiting period of about 15 minutes will be required before the switch has cooled off sufficiently to re-start the engine. An overheated engine will score the cylinder walls, burn out connecting rod and crankshaft bearings, also warp pistons and valves. The cause of the overheating condition will have to be remedied before the engine is re-started. *See* **Engine Overheats** *paragraph in Troubles, Causes and Remedies section.*

## SAFETY PRECAUTIONS

Never fill fuel tank while engine is in operation or hot, as danger from fire would be incurred.

Never operate engine in a closed building unless the exhaust is piped outside. This exhaust contains carbon monoxide, a poisonous, odorless and invisible gas, which if breathed into the lungs would cause serious illness and possible death.

Never make adjustments on machinery while it is connected to the engine, without first removing the ignition cables from the spark plug. Turning over the machinery by hand during adjusting or cleaning might start the engine, and machinery with it, causing serious injury to the operator.

***Always keep all parts of the engine clean. This will prolong engine life, and give more satisfactory operation.***

***Every 4 to 8 hours*** depending on dust conditions, check air cleaner and change oil. *See Page 8.*

***Every 8 hours*** check crankcase oil level. Keep filled to ***full*** mark on oil gauge sabre, but no more. *See Fig. 4.*

***Every 50 hours*** drain crankcase and refill with fresh oil. *See Lubrication, Pages 6 and 8.*

## SPECIAL INSTRUCTIONS FOR AGRICULTURAL ENGINES

### KEEP YOUR ENGINE CLEAN

This engine is cooled by blasts of air which must be allowed to circulate all around the engine cylinders and cylinder heads to properly cool the engine and thereby keep it in good running condition. If dust or chaff is allowed to collect in the cylinder shrouding or in the V between the cylinders it will retard the flow of air and cause the engine to overheat.

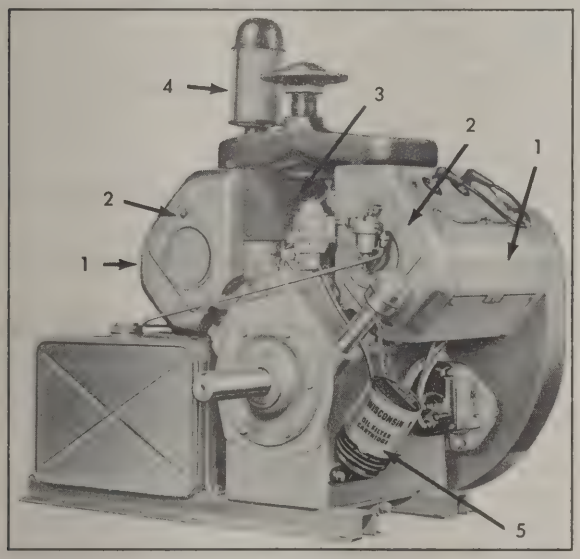


Fig. 23 184556C-1

In the *Figs. 23* and *24*, are pointed out the few necessary cleaning precautions which must be followed to insure satisfactory engine performance and engine life.

1. Remove these covers frequently and clean out all dust and chaff. Be sure to replace covers.
2. Open these covers frequently and clean out all dust and chaff. Be sure to close covers.
3. Keep this space between cylinders free of dust and chaff.
4. Read instructions on this air cleaner regarding its care. This is important. The entire air cleaner should be removed from the engine at least once a year, and washed in a cleaning fluid to clean out dirt gathered in the back fire trap in the top part of the air cleaner.

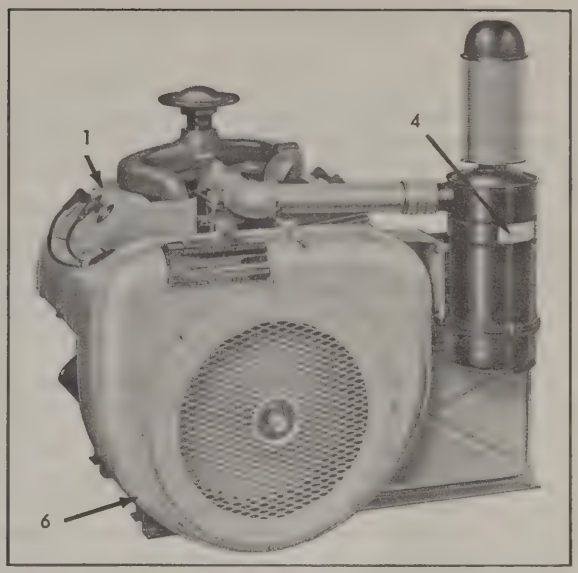


Fig. 24 104714C

5. Replace this oil filter cartridge every other oil change. If operating conditions are extremely dusty replace cartridge every oil change. Be sure that your replacement is a Wisconsin Micro-Fine filter.
6. Do not allow shrouding to become damaged or badly dented as this will retard air flow.

***Never operate engine with air shrouding removed. This will retard the air cooling.***

### SUGGESTION FOR CONTINUOUS HOT WEATHER OPERATION

The intake system of a gasoline engine is designed so that the fuel may be vaporized and mixed with the correct amount of air for proper combustion in the cylinders. To vaporize the fuel, a certain amount of heat must be supplied to the intake manifold. The temperature of the air to the carburetor varies considerably between summer and winter weather, so that in designing the intake manifold a happy medium must be chosen for the amount of heat supplied. This heat is usually taken from the exhaust manifold through a connection called a hot spot, between the two manifolds. The size of this hot spot is very important. If it is too small, insufficient heat will be supplied to the inlet manifold and carburetor in cold weather, and poor vaporization of fuel and irregular operation of the engine will result, with loss of power. If the hot spot is too large, the inlet manifold and carburetor will be too hot in summer weather and this will result in heating the engine unnecessarily, and there will also be loss in power. There might also result, some vapor lock, due to overheating the fuel in the carburetor, or in the fuel feed lines to the carburetor. Vapor lock is fuel in a gaseous state, in the fuel lines or in the smaller passages in the carb-

uretor, preventing the flow of fuel, thus stopping the engine.

If an engine is stopped by vapor lock, there will be considerable difficulty in starting the engine again, until it has cooled off sufficiently to overcome the vapor lock, and thus allow the fuel to flow normally.

Vapor lock, or a hot inlet manifold and carburetor, which will vaporize the fuel too rapidly, resulting in an over rich mixture, are the main reasons for hard starting of hot engines. This condition is more apt to occur with four cylinder, rather than with one or two cylinder engines.

***The following suggestions will help considerably to overcome these hard starting problems:***

If the engine has been running hard and is hot, do not stop it abruptly from full load, but remove the load and allow engine to run idle at 1000 to 1200 R.P.M. for three to five minutes, depending on how hot the engine has been. This will reduce the internal temperature of the engine much faster than stopping the engine, and of course the external temperature, including the manifold and carburetor, will also reduce faster.

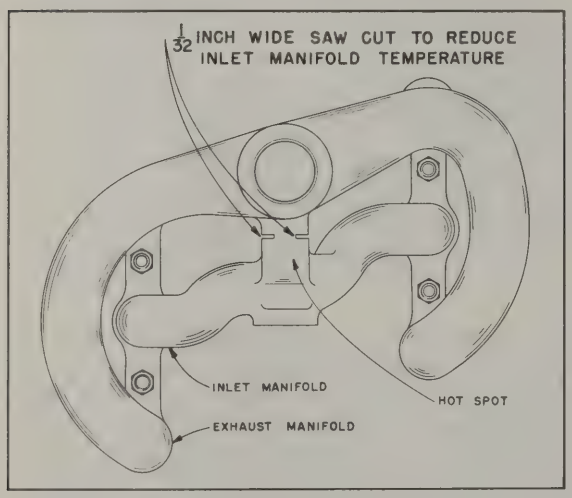


Fig. 25

In extreme cases, four-cylinder engines which operate mainly in hot weather, can be benefitted by reducing the width of the hot spot between the inlet and exhaust manifolds, to about one half or less, by sawing in from each side with a hack saw. The width of the hack saw cut (about 1/32 inch) is sufficient to reduce the heat flow and reduce inlet manifold and carburetor temperatures, and improve hot starting conditions. *See Fig. 25.*

## TROUBLES
## CAUSES AND REMEDIES

Three prime requisites are essential to starting and maintaining satisfactory operation of gasoline engines. They are:

1. ***A proper fuel mixture*** in the cylinder.
2. ***Good compression*** in the cylinder.
3. ***Good spark, properly timed,*** to ignite the mixture.

If all three of these conditions do not exist the engine cannot be started. There are other factors which will contribute to hard starting; such as, too heavy a load for the engine to turn over at a low starting speed, a long exhaust pipe with high back pressure, etc. These conditions may affect the starting, but do not necessarily mean that the engine is improperly adjusted.

As a guide to locating any difficulties which might arise the following causes are listed under the three headings: ***Fuel Mixture, Compression,*** and ***Ignition.***

In each case the causes of trouble are given in the order in which they are most apt to occur. In many cases the remedy is apparent, and in such cases no further remedies are suggested.

## STARTING DIFFICULTIES

### FUEL MIXTURE

No fuel in tank or fuel shut-off valve closed.

Fuel pump diaphragm worn out, so pump does not supply carburetor with fuel.

Carburetor not choked sufficiently, especially if engine is cold. *See 'Choke', Page 10.*

Water, dirt, or gum in gasoline interfering with free flow of fuel to carburetor.

Poor grade or stale gasoline that will not vaporize sufficiently to form the proper fuel mixture.

Carburetor flooded, caused by too much choking especially if engine is hot. *See 'Choke', Page 10.*

Dirt or gum holding float needle valve in carburetor open. This condition would be indicated if fuel continues to drip from carburetor with engine standing idle. Often tapping the float chamber of the carburetor very lightly with the wood handle of a screw driver or similar instrument will remedy this trouble. Do not strike carburetor with any metal tools, it may be damaged. Also if the mixture in the cylinder, due to flooding, is not too rich to start the engine, starting should be tried, as it will usually correct the trouble. In this case the choke should be left open.

If, due to flooding, too much fuel should have entered the cylinder in attempting to start the engine, the mixture will most likely be too rich to burn. In that case the spark plugs should be removed from the cylinders and the engine then turned over several times with the starting crank, so the rich mixture will be blown out through the spark plug holes. The choke on the carburetor should of course be left open during this procedure. The plugs should then be replaced and starting tried again.

To test for clogged fuel line, loosen fuel line nut at carburetor slightly. If line is open, fuel should drip out at loosened nut.

## COMPRESSION

If the engine has proper compression, considerable resistance will be encountered in the pull on the starting crank. If this resistance is not encountered, compression is faulty. Following are some reasons for poor compression:

Cylinder dry due to engine having been out of use for some time. *See 'Restoring Compression', Page 16.*

Loose spark plugs or broken spark plug. In this case a hissing noise will be heard in cranking engine, due to escaping gas mixture on compression stroke.

Damaged cylinder head gasket or loose cylinder head. This will likewise cause hissing noise on compression stroke.

Valve stuck open due to carbon or gum on valve stem. To clean valve stems, *see 'Valves', Page 24.*

Valve tappets adjusted with insufficient clearance under valve stems. *See 'Valve Tappets', Page 25.*

Piston rings stuck in piston due to carbon accumulation. If rings are stuck very tight this will necessitate removing piston and connecting rod assembly and cleaning parts. *See 'Piston and Connecting Rod', Page 22.*

Scored cylinders. This will require reboring of the cylinders and fitting with new pistons and rings. If scored too severely an entirely new cylinder block may be necessary.

## IGNITION

*See 'Magneto Ignition Spark', Page 11* or *'Distributor-Battery Ignition', Page 11*. No spark may also be attributed to the following:

Ignition cable disconnected from magneto, distributor, coil or spark plugs.

Broken ignition cables, causing short circuits.

Ignition cables wet or oil soaked.

Spark plug insulators broken.

Spark plugs wet or dirty.

Spark plug point gap wrong. *See Page 15.*

Condensation on spark plug electrodes.

Magneto or Distributor breaker points pitted or fused.

Magneto or Distributor breaker arm sticking.

Magneto or Distributor condenser leaking or grounded.

Spark timing wrong. *See 'Magneto Timing', Page 11*, or *'Distributor-Battery Ignition', Page 11.*

## ENGINE MISSES

Spark plug gap incorrect. *See Page 15.*

Worn and leaking ignition cables.

Weak spark. *See 'Magneto Ignition Spark', Page 11*, or *'Distributor-Battery Ignition', Page 11.*

Loose connections at ignition cable.

Magneto or Distributor breaker points pitted or worn.

Water in gasoline.

Poor compression. *See 'Compression', Page 19.*

## ENGINE SURGES OR GALLOPS

Carburetor flooding.

Governor spring hooked into wrong hole in lever, or governor rod incorrectly adjusted. *See 'Governor', Page 26.*

## ENGINE STOPS

Fuel tank empty.

Water, dirt or gum in gasoline.

Gasoline vaporized in fuel lines due to excessive heat around engine (Vapor Lock). *See Fig. 25,* and *'Stopping Engine', Page 16.*

Vapor lock in fuel lines or carburetor due to using winter gas (too volatile) in hot weather.

Air vent hole in fuel tank cap plugged. Engine scored or stuck due to lack of oil.

Ignition troubles. *See 'Ignition', Page 19.*

## ENGINE OVERHEATS

Crankcase oil supply low. Replenish immediately.

Ignition spark timed wrong. *See 'Magneto Timing', Page 11*, or *'Distributor-Battery Ignition', Page 11.*

Low grade of gasoline.

Engine overloaded.

Restricted cooling air circulation.

Part of air shroud removed from engine.

Dirt between cooling fins on cylinder head.

Engine operated in confined space where cooling air is continually recirculated, consequently becoming too hot.

Carbon in engine.

Dirty or incorrect grade of crankcase oil.

Restricted exhaust.

Engine operated while detonating due to low octane gasoline or heavy load at low speed.

## ENGINE KNOCKS

Poor grade of gasoline or of low octane rating. *See 'Fuel', Page 9.*

Engine operating under heavy load at low speed.

Carbon or lead deposits in cylinder head.

Spark advanced too far. *See 'Magneto Timing', Page 11,* or *'Distributor-Battery Ignition', Page 11.*

Loose or burnt out connecting rod bearing.

Engine overheated due to causes under previous heading.

Worn or loose piston pin.

### ENGINE BACKFIRES THROUGH CARBURETOR

Water or dirt in gasoline.

Engine cold.

Poor grade of gasoline.

Sticky inlet valves. *See 'Valves', Page 24.*

Overheated valves.

Spark plugs too hot. *See 'Spark Plug', Page 15.*

Hot carbon particles in engine.

## DISASSEMBLING AND REASSEMBLING ENGINES

Engine repairs should be made only by a mechanic who has had experience in such work. When disassembling the engine it is advisable to have several boxes available so that parts belonging to certain groups can be kept together, such as, for instance, the cylinder head screws, etc. Capscrews of various lengths are used in the engine, therefore great care must be exercised in reassembly so the right screw will be used in the various places, otherwise damage may result.

Tighten the cap screws and nuts of the manifolds, cylinder heads, gear cover, oil pan, connecting rods, cylinder blocks, main bearing plate and the spark plugs to the specified torque readings indicated in the following paragraphs of reassembly.

While the engine is partly or fully dismantled, all of the parts should be thoroughly cleaned. Remove all accumulated dirt between the fins.

If it is desired to disassemble the engine, the following order should be substantially adhered to. As disassembly progresses, the order may be altered somewhat if desired, as will be self-evident to the mechanic. Reassembly of the engine should be made in the reverse order.

### ACCESSORIES

The air cleaner, magneto, and if an electric starter and generator are used, these should be removed first.

### SHEET METAL HOUSE

With engines enclosed in a sheet metal house, the top cover or canopy of the house should be removed by taking out the screws holding it to the end panels. For removing end panels, see following paragraphs.

### FLYWHEEL

It is necessary that the flywheel be removed next. After the flywheel screen has been removed, drive out the starting crank pin in the crankshaft and remove the flywheel nut and washer. Then as shown in *Fig. 26,* the flywheel can be removed from the crankshaft by tapping the end of the crankshaft with a babbitt hammer. Do not use a hard hammer as it would ruin the crankshaft and bearings.

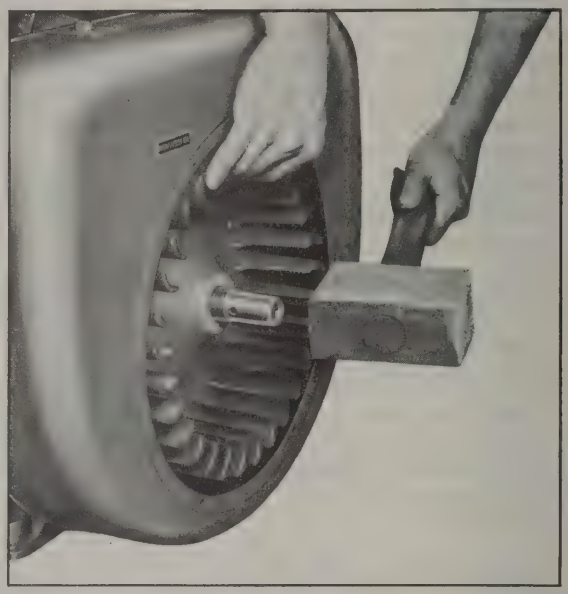

Fig. 26 76696C

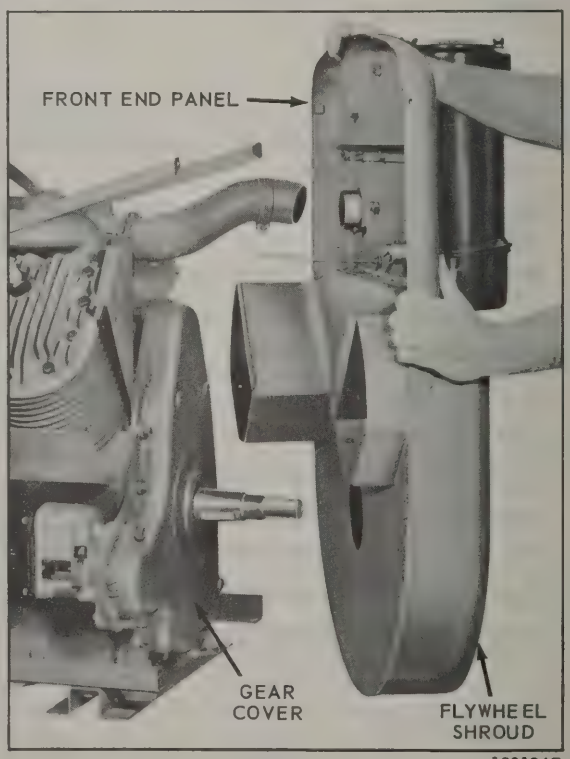


Fig. 27 180184C

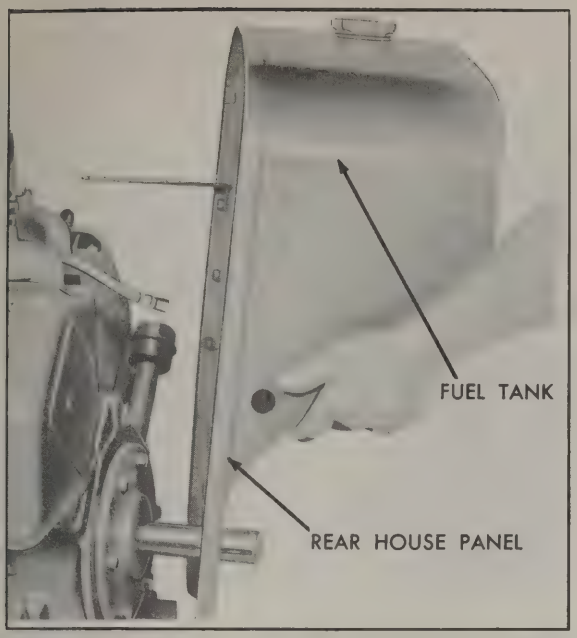


Fig. 28 71050C

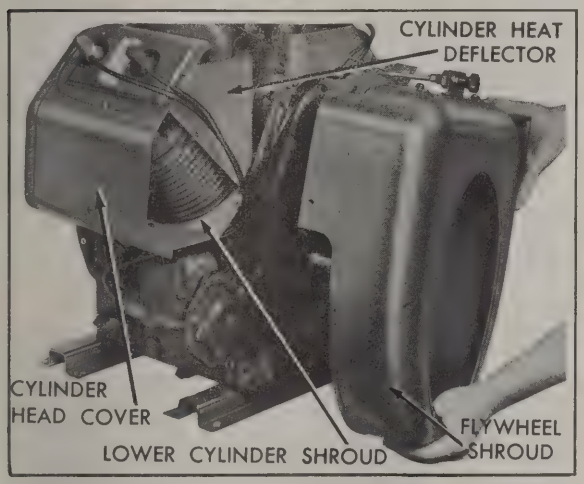


Fig. 29 104811C

## AIR SHROUDING

To disassemble air shrouding, *(see Figs. 27 to 29)* first remove cylinder head covers and the screws mounting the flywheel shroud to the lower cylinder shrouds and cylinder heat deflectors, then remove the screws holding the flywheel shroud to gear cover. When complete engine house is disassembled, remove the front end panel as shown in *Fig. 27* together with flywheel shroud, and the rear end panel, *see Fig. 28* complete with fuel tank. Balance of shrouding can now be readily removed.

## GAS TANK

If a side mount gasoline tank is used, this should be removed next. *See Fig. 30.*

## CARBURETOR AND MANIFOLDS

The carburetor and manifold can be removed as a complete unit as shown in *Fig. 31.*

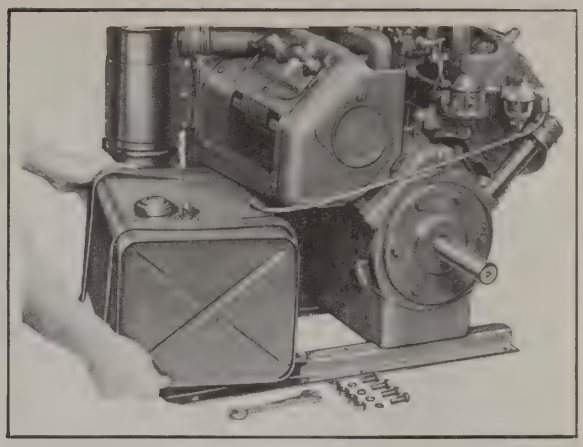

Fig. 30 83608C

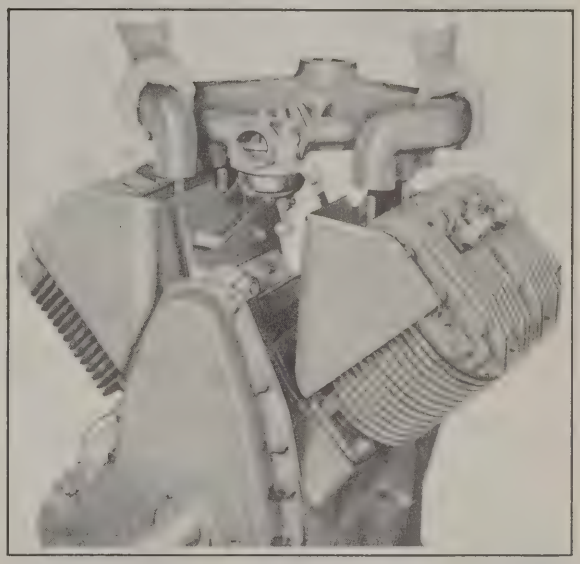

Fig. 31 104579C

In reassembly tighten the nuts for mounting the manifolds, 40 to 50 foot pounds torque. Tightening beyond specification may cause the flanges to break.

## CYLINDER HEAD

The cylinder head must be removed if it is necessary to regrind valves, or to do work on the piston rings or connecting rod. All of the cylinder head screws are plainly in view and can be easily removed. Screws of different lengths are used but these can be properly reassembled according to the various lengths of cylinder head bosses.

Before reassembling the cylinder head, all carbon and lead deposits should be removed. It is recommended that a new cylinder head gasket be used on reassembly as the old gasket will be compressed and hard so that it may not seal properly. Mount gasket with the bend toward the cylinder block. Tighten cylinder head screws, 25 to 32 foot pounds torque.

## GEAR COVER

Disengage the governor linkage as described on *page 26* before removing gear cover, since the same mounting screws for governor housing and gear cover are used. Remove gear cover screws and drive out two dowel pins as shown in *Fig. 32*. The cover can then be removed exposing the timing gears as shown in *Fig. 33*. In reassembly, tighten capscrews, 14 to 18 foot pounds torque.

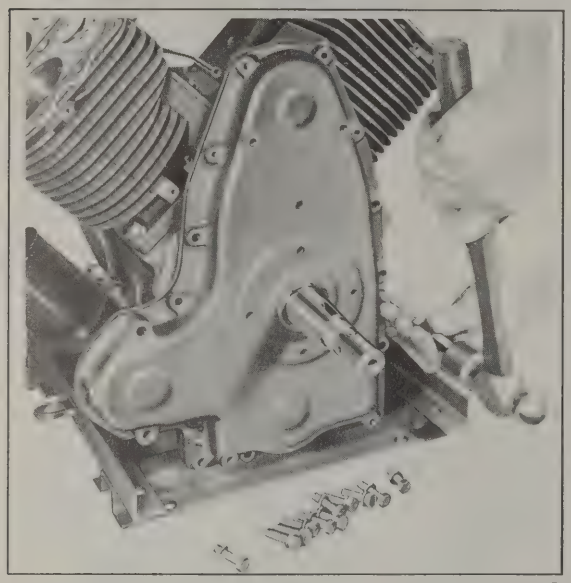

Fig. 32 7 1056C

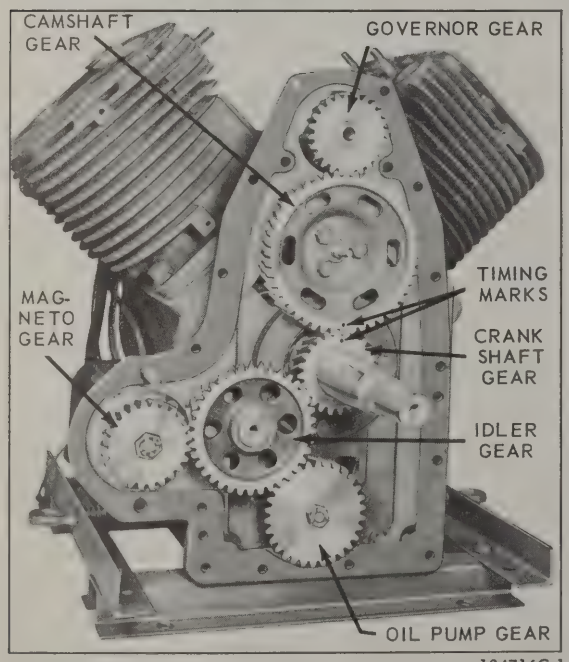


Fig. 33 104716C-1

## CAMSHAFT GEAR

Remove the three capscrews and lockwashers which hold the gear to the end of the camshaft. Note that the mounting holes in the camshaft gear are staggered in such a manner that the gear can be assembled to the shaft only one way which will automatically time the gear to the shaft. Pry the gear off the camshaft using a screwdriver or similar wedge tool.

## IDLER GEAR AND SHAFT

Remove the Allen-head set screw on the magneto side of the crankcase which locks the idler shaft in position. With the use of a gear puller, the idler shaft and idler gear assembly can be removed from the crankcase. *See Fig. 34.*

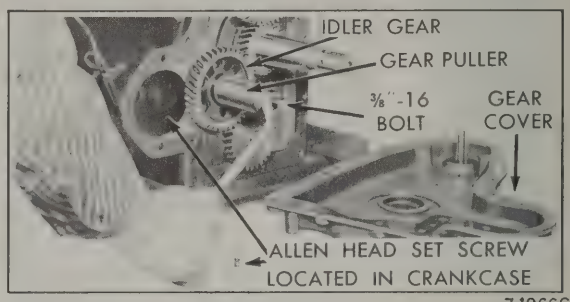


Fig. 34 7 1066C

## OIL PAN

The engine can now be inverted so that the supports and oil pan can be removed. *See Fig. 35.*

In reassembly, mount deep end of oil pan toward oil pump. Tighten mounting screws, 6 to 9 foot pounds torque.

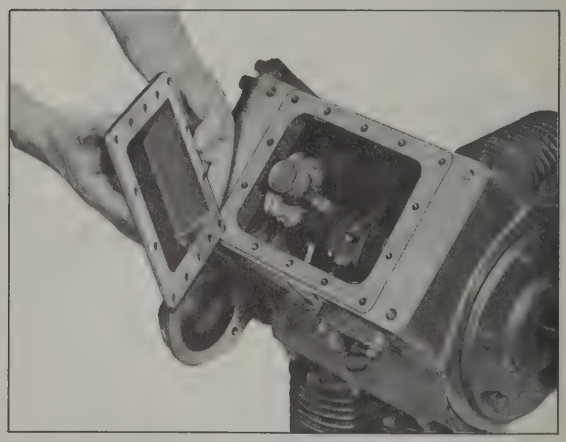

Fig. 35 104721C

## OIL PUMP

To remove oil pump, first take out the slotted pipe plug, and then with a 5/32 inch Allen wrench, remove the oil pump lockscrew, as shown in *Fig. 36*. Remove lock nut holding oil pump driving gear to shaft. Then, with a soft brass rod or punch, drive shaft through gear as shown in *Fig. 37*. The oil pump can then be withdrawn toward center of crankcase.

## PISTONS AND CONNECTING RODS

After removal of the oil pump, all of the connecting rod bolts will be accessible. Remove the palnuts and

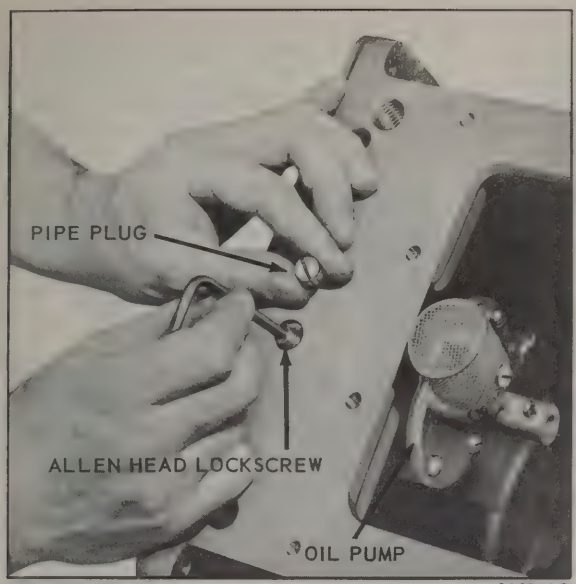


Fig. 36 180178C

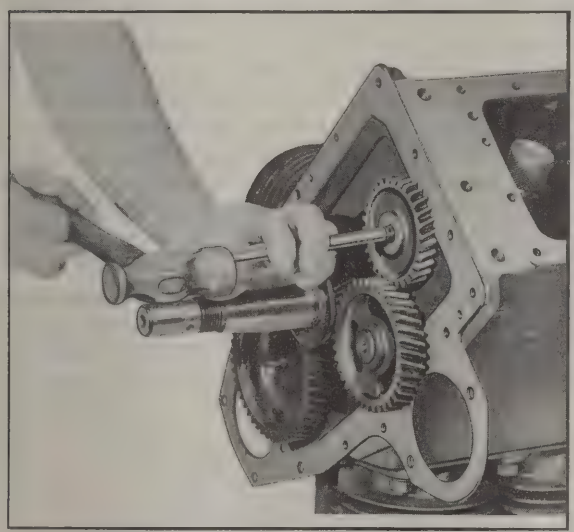

Fig. 37 83615C

hexagon nuts, then by tapping the ends of the bolts lightly, being careful not to mar the threads, the connecting rod cap can be freed from the bolts. The rod with the piston can now be pushed up through the cylinder. Be careful not to score the crankshaft journals, by allowing the rod bolts to strike or scrape across them, when removing the connecting rod and piston assemblies. Replace the caps on the rods immediately so that they are in the correct position for reassembly, being sure that the shims are in place before the cap is put on. A number is stamped on the side of the rod and cap to match each connecting rod with its corresponding cap. These numbers must be on the same side of the connecting rod in reassembly. *See Fig. 38.*

When assembling piston to connecting rod, the split side of the piston should be on the opposite side of the rod to the oil hole in connecting rod cap. *See*

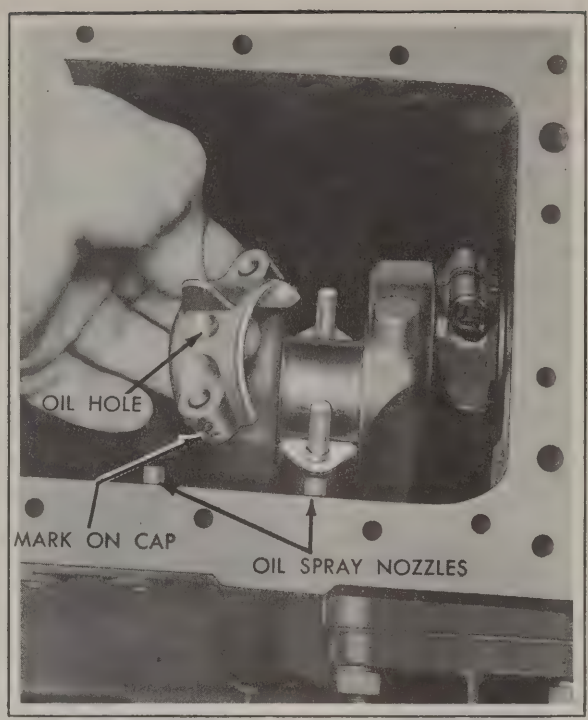


Fig. 38 104819C

*Fig. 3.* Be sure the oil hole in the connecting rod cap is toward the oil spray nozzle. *See Fig. 38.*

Tighten connecting rod nuts, 28 to 32 foot pounds torque, then install 'Pal' locknuts and tighten with wrench ¼ turn beyond 'finger-tight' position.

Be sure piston and connecting rod assemblies are put back into the same bore from which they were removed. Use a suitable ring compressor in reassembly and stagger the piston ring gaps 90° apart around the piston. Oil the pistons, rings, wrist pins, rod bearings and cylinder walls before assembly.

## PISTON RINGS

Install rings by placing the open end of the ring on piston first, as shown in *Fig. 39.* Spread ring only far enough to slip over piston and into correct groove, being careful not to distort ring.

The scraper ring and oil ring must be installed on the piston with the scraper edge down, otherwise oil pumping and excessive oil consumption will result. *See Fig. 40.*

## CYLINDERS

The cylinder blocks can now be removed from the crankcase if necessary. In reassembling, put the blocks back on the same side from which they were removed. Clean all dirt and other deposits from fins before reassembling. If the cylinders are worn more than .005 inch oversize, they should be reground and fitted with oversize pistons and rings.

Tighten cylinder block mounting nuts, 62 to 78 foot pounds torque.

Fig. 39 71152C

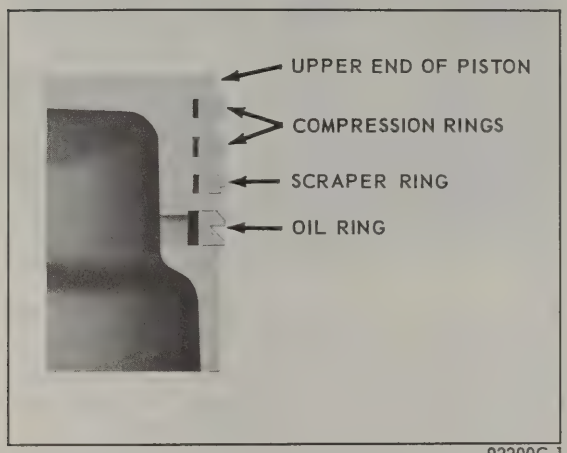


Fig. 40 92200C-1

## PISTON, RING AND ROD CLEARANCE CHART

| | | |
|---|---|---|
| Piston to Cylinder at Piston Skirt | | .004 to .0045 |
| Piston Ring Gap | | .017 |
| Piston Ring Side Clearance in Grooves | Top Ring | .0015 to .003 |
| | 2nd Ring | .0015 to .003 |
| | Scraper Ring | .0015 to .003 |
| | Oil Ring | .0025 to .004 |
| Connecting Rod to Crank Pin | Diameter | .0007 to .002 |
| | Side | .004 to .011 |
| Piston Pin to Connecting Rod Bushing | | .0005 to .001 |

## VALVES

Remove the valve tappet inspection plate. Compress the valve springs with a standard automotive type valve lifter. We recommend a No. 358 valve lifter

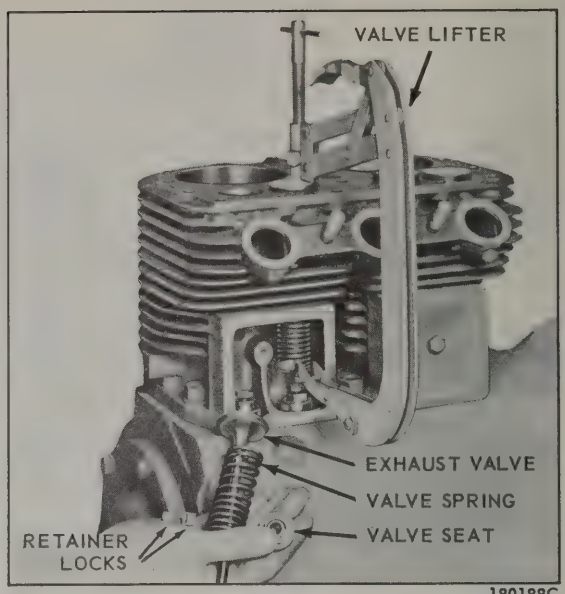


Fig. 41 180188C

manufactured by KD Tools of Lancaster, Penn., or equivalent. *See Fig. 41.* Insert a rag in the opening at the bottom of the valve chamber so the valve spring seat retaining locks do not fall into the engine crankcase. Remove the valve spring seat retaining locks, seats, springs, valves and clean these, as well as the ports and guides, of all carbon and gum deposits. Tag each valve so that in reassembly they will be mounted in the same guide they were removed from.

The valve face is ground at 45° to the vertical center line of the valve stem and the valve seat insert

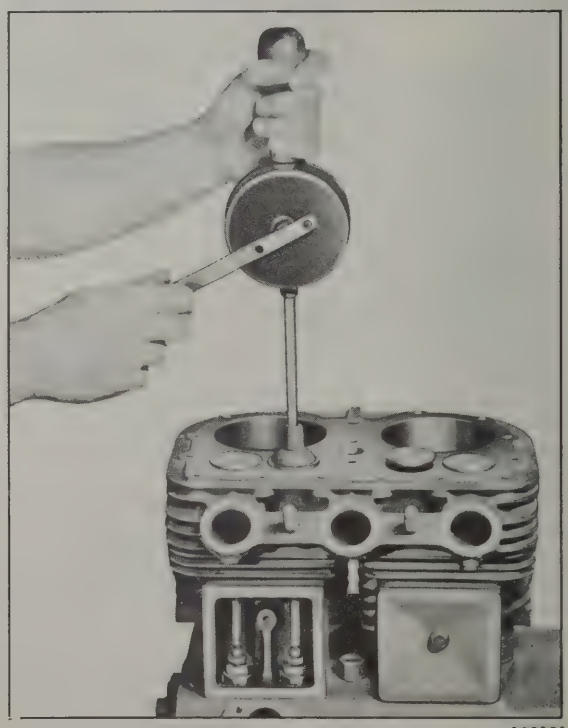

Fig. 42 180181

should also be ground at a 45° angle. After grinding, valves and inserts should be lapped with a suitable lapping compound or they will leak due to improper seating within the first few hours of operation. After valve seats have been cleaned, apply lapping compound to the valve face and put the valves back into their guides. Lap the valves by rotating them back and forth with a reciprocating advancing valve tool. Occasionally lift the valves and reseat them in a different position to insure a uniform seat which will show entirely around the valves. After valves have been lapped in evenly, remove them from the block and wash the valves and block thoroughly with gasoline or kerosene.

The valve stems should have a clearance of .003" to .005" in the guides. When the clearance becomes .007", the guides should be reamed and fitted with valves that have a .004" oversize valve stem. *Later Model Engines* have replaceable valve guides thus eliminating the necessity of using valves with oversize stems, as the worn guides can be driven out and replaced with new ones.

The exhaust valves and valve seat inserts are 'Stellite' faced.

## CRANKSHAFT

To remove the crankshaft, first remove the six capscrews in the main bearing plate at the take-off end of the engine. This plate can then be pried off, and crankshaft removed from that end of crankcase. *See Fig. 43.* Be sure to keep shims and gaskets in place as these are used to give the proper end play to the Timken main bearings on the crankshaft. This end play should be .002 to .004 inch when engine is cold. There is practically no wear in these Timken bearings so that no readjustment is necessary after proper assembly.

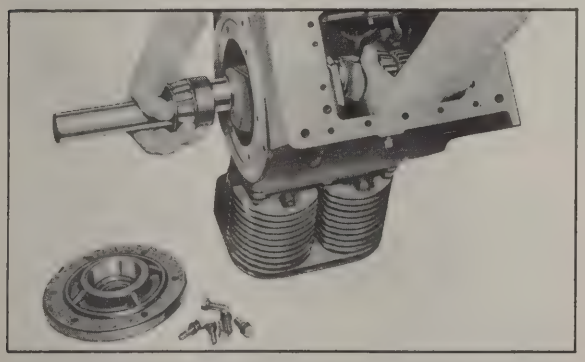

Fig. 43 71075C

When reassembling crankshaft, the timing marks on the crankshaft gear and the camshaft gear must be matched *(See Fig. 33)*, otherwise engine will not operate properly, or if timing is off considerably, engine will not run at all.

Mount main bearing plate in the correct position in reassembly. The word ***'TOP'*** is cast on the outside of the plate, and should be mounted in this position. Mounting the main bearing plate upside down would prevent the main bearing from being properly lubricated. Tighten main bearing plate capscrews, 25 to 30 foot pounds torque.

## CAMSHAFT

The camshaft can be withdrawn from the flywheel end of the engine. *See Fig. 44.* When replacing, be sure the spring and plunger are in place in the end of the camshaft, as these hold the camshaft in position endwise. These parts are shown in the sectional view of the engine, *Fig. 3.*

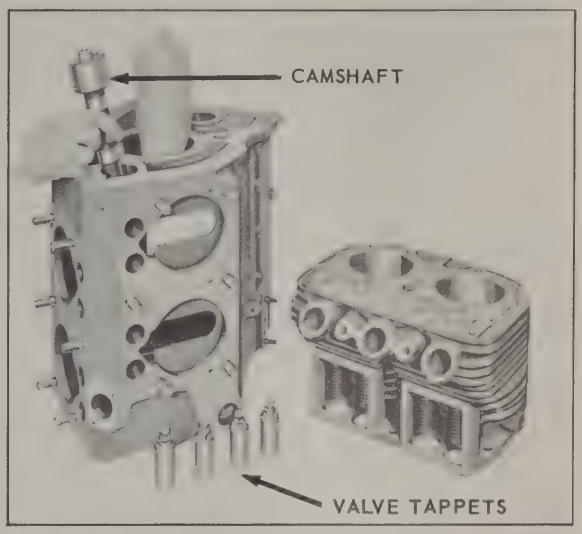


Fig. 44 104569C

## VALVE TAPPETS

The valve tappets should be pulled out before the camshaft is removed. In reassembly, the tappets can be inserted in proper position in the crankcase after the camshaft is reassembled. *See Fig. 44.*

After the cylinders have been reassembled to the crankcase, the valve tappets should be adjusted when cold, to a clearance of:

Inlet valves ..... – .011" to .013"
Stellite exhaust valves – .016" to .018"
*See Fig. 45.*

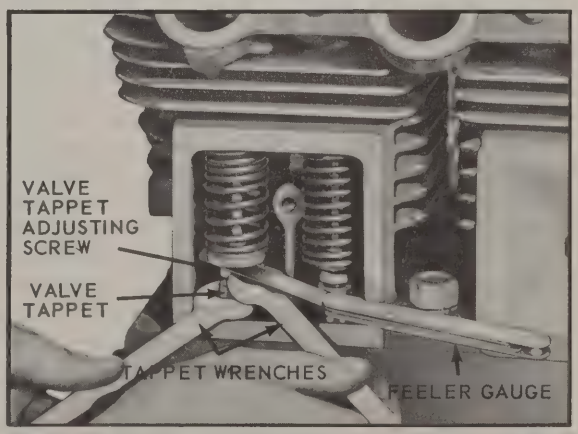


Fig. 45 180186C

## GOVERNOR – ADJUSTMENT

The centrifugal flyball governor rotates on a stationary pin driven into the upper part of the timing gear cover, and the governor is driven off the camshaft gear at crankshaft speed.

The flyweights are hinged to lugs on the gear. Hardened pins on the flyweights bear against the flanged sliding sleeve, moving it back and forth as the flyweights move in or out. The motion of the sleeve is transmitted through a ball thrust bearing to the governor lever, which in turn is connected to the carburetor throttle lever. A spring connected to the governor lever tends to hold the governor flyweights to their inner position, also to hold the carburetor throttle open. As the engine speed increases the centrifugal force in the flyweights acts against the spring and closes the throttle to a point where the engine speed will be maintained practically constant under varying load conditions. This speed can be varied to suit conditions by adjusting the governor spring to suit.

| LOAD R.P.M. | NO LOAD R.P.M. | HOLE NO. |
|---|---|---|
| 1400 | 1550 | 4 |
| 1500 | 1650 | 5 |
| 1600 | 1725 | 5 |
| 1700 | 1850 | 6 |
| 1800 | 1950 | 7 |
| 1900 | 2025 | 8 |
| 2000 | 2125 | 8 |
| 2100 | 2250 | 9 |
| 2200 | 2350 | 10 |

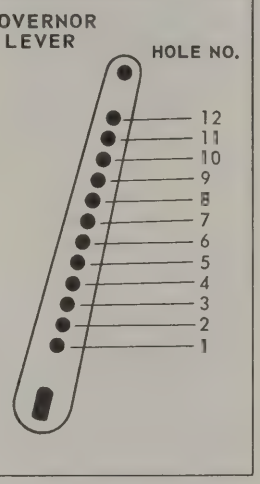


The connecting link between the governor and carburetor must be adjusted to the proper length otherwise the governor action will be faulty. With the engine at rest the governor spring will hold the flyweights ***in***, and the connecting link must be of such length as to hold the carburetor throttle wide open at that point. The accuracy of this adjustment can be tested by disconnecting the link from the governor lever, and then pushing the link toward the carburetor as far as it will go. This will open the throttle wide. The bent end of the link should then exactly register with the hole in the governor lever. If it does not, the link should be screwed into or out of the swivel block on the carburetor lever, until the above mentioned registry is attained. The link should then be again connected to the governor lever. If this adjustment is not made accurately the governor may cause the engine speed to surge or otherwise be unsatisfactory.

The governor can be disassembled from the engine by first removing the governor housing, after which the entire governor can be withdrawn from the stationary pin. The construction of the governor can be best seen from the sectional drawing of the engine, *Fig. 3.*

The governor lever is furnished with 12 holes, as shown in the following table, for attaching the governor spring. It is very important that the spring is hooked into the proper hole to suit the speed at which the engine is operated. A table is given herewith, showing the full load and no load speeds of the engine and the hole corresponding thereto. The full load speed will be from 150 to 125 revolutions less than the no load speed. As an example, if the engine is to be operated at 2125 revolutions per minute without load, the spring should be hooked into the 8th hole in the governor lever and the spring tension adjusted by means of the adjusting screw on the spring to run 2125 revolutions per minute. The speed at full load will then be approximately 2000 revolutions per minute.

# CLUTCH AND REDUCTION UNITS

## CLUTCH

The clutch furnished with this model of engine is of the dry disc type. No oil should be put into the clutch housing. There are three points on these clutches requiring lubrication and these are filled with grease at the factory. ***Grease gun fittings*** are furnished for periodic lubrication. The housing bearing and the pilot bearing should receive additional grease every fifty hours of operation. The clutch throwout bearing should be greased every day before starting. Use Mobil Gargoyle grease BRB No. 3, or Sinclair AF-1 grease, or equal. *See Fig. 46.*

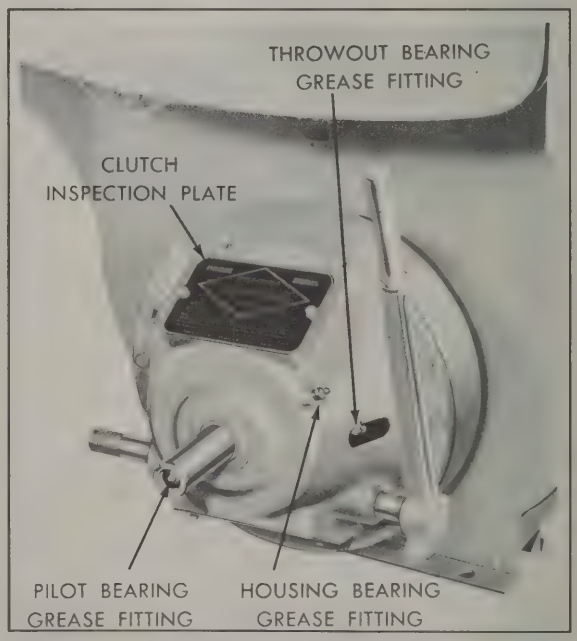


104570C

Fig. 46

## CLUTCH ADJUSTMENT

If the clutch begins to slip, it should be readjusted, otherwise it would become overheated and damaged. First release clutch operating lever and remove clutch inspection plate. For the Rockford clutch, turn clutch over until ***adjusting ring lock*** is up. Release lock with a screw driver or similar tool as shown in *Fig. 47.* The adjusting ring should then be turned in a clockwise direction one notch at a time until a very firm pressure is required to engage the clutch by the operating lever. Be sure to re-engage the adjusting ring lock into a notch in the ring. Replace inspection cover.

Fig. 47 104574C

For the Twin Disc clutch, pull adjusting lockpin out, as shown in *Fig. 48,* and turn the adjusting yoke in a clockwise direction until the operating lever requires a distinct pressure to engage.

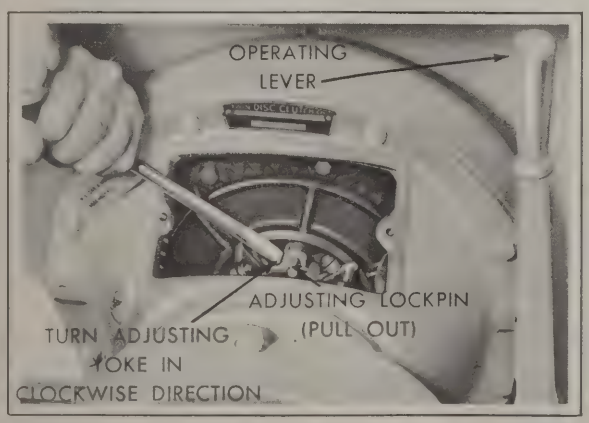


104578C

Fig. 48

## CLUTCH REDUCTION UNIT

Clutch reduction units are furnished with several different ratios, some with spur gears, for counter-enginewise rotation; others with internal gears, for enginewise rotation. The clutch is of the dry disc type and no oil should be put into the clutch housing. Apply a small amount of lubricant to clutch throwout collar once a day before starting. Also oil clutch shifter shaft through oil fittings on each side of housing. *See Fig. 49.* The clutch shaft pilot bearing and outer bearing are self lubricated with oil in gear case.

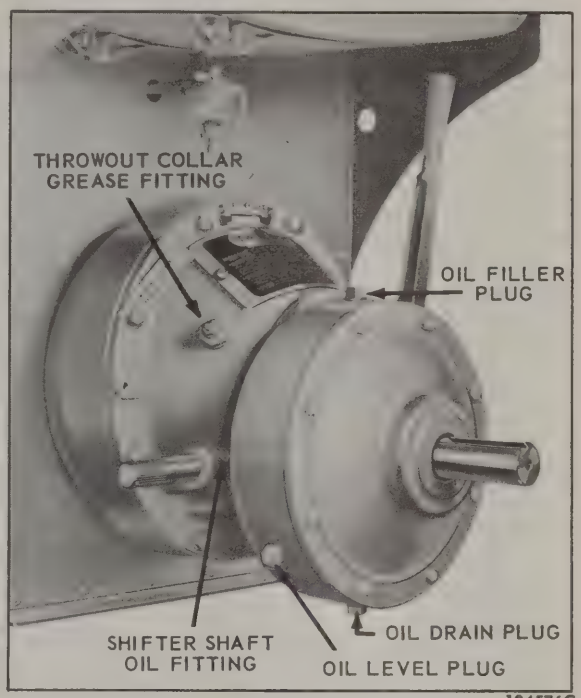


Fig. 49 104576C

If clutch slips, heats, or operating lever jumps out, the clutch must be adjusted. Release clutch operating lever and remove hand hole plate. For the Twin Disc clutch, turn clutch until adjusting lockpin can be reached. Pull adjusting lockpin out and turn the adjusting yoke to the right or clockwise, with screw driver or similar tool, until the operating lever requires a distinct pressure to engage. *See Fig. 48.* A new clutch generally requires several adjustments until the friction surfaces are worn in.

For the Rockford clutch, release adjusting ring lock with a screwdriver, as shown in *Fig. 47,* and turn the adjusting ring in a clockwise direction one notch at a time until a very firm pressure is required to engage the clutch.

The reduction gear is operated in oil and the gear case oil level must be maintained to oil level plug. *See Fig. 49.* In Twin Disc units high grade transmission oil S.A.E. No. 90 to No. 110 Viscosity must be used. For Rockford units use No. 30 S.A.E. crankcase oil. Change oil every 2000 hours of service, while unit is warm.

## STORAGE OF ENGINE FOR WINTER

When the season's work is completed, the following instructions should be carried out very carefully to protect the engine over winter.

The outside of the engine, including the cooling fins on the cylinders and heads, should be thoroughly cleaned of all dirt and other deposits.

The air cleaner at the carburetor intake should be thoroughly cleaned of all oil and accumulated dust and sediment removed from the oil cup at the bottom of the cleaner.

To protect the cylinders, pistons, rings and valves and keep them from rusting and sticking, a half and half mixture of kerosene and good gas engine oil, (the same kind of oil as used in the crankcase of the engine), should be injected into the pipe tap opening on the intake manifold while the engine is warm and running at moderate speed. About a quarter of a pint is necessary on a four cylinder engine, or enough so that a heavy bluish smoke will appear at the exhaust. The ignition switch should then be shut off and the engine stopped. This operation will give a coating of oil on the above mentioned parts, protecting them from the atmosphere.

On engines where the pipe tap on the intake manifold is inaccessible, the kerosene and oil mixture may be injected into the air intake on the carburetor while the engine is running, so the mixture will be drawn into the engine. The air cleaner connection will of course have to be disconnected from the carburetor to do this.

All old used oil should be drained from the crankcase while the engine is warm, as the oil will then flow much more freely than when cold.

Drain fuel system, including gasoline lines, carburetor, fuel pump and tank of all gasoline to prevent lead and gum sediment interfering with future operation.

All exposed unpainted metal parts should be coated with grease or heavy oil.

Before starting the engine again the next season, the crankcase drain plug should again be removed, so that any condensation, which may have collected during the winter, may be drained before new crankcase oil is added.

A good plan, and one that is recommended is to remove the crankcase bottom cover or oil base in the spring before starting the engine for the new season, and scrubbing off all sediment which may have collected there.

When replacing the bottom cover, a new gasket should be used.

***Be sure to fill the crankcase with a good quality of crankcase oil to the high level point, before starting the engine. Do not use any oil heavier than SAE No. 30. Also be sure to put oil to the proper level in the air cleaner.***

It is also recommended to use new spark plugs at the beginning of the next season, especially if the engine has given considerable service.

Refuel engine and follow the starting instructions as shown on preceding pages of this manual.

***It is highly recommended that machines be stored inside a building through the winter. If this is not possible, the engine should be protected from snow and ice by a proper covering.***

# REPAIR PARTS LIST

**READ THESE INSTRUCTIONS BEFORE ORDERING PARTS**

**THE MODEL, SPEC AND SERIAL NUMBER OF YOUR ENGINE, SHOWN ON THE NAME PLATE ATTACHED TO THE AIR SHROUD, MUST BE GIVEN WHEN ORDERING PARTS.**

FILL IN THE ABOVE INFORMATION ON THE PHOTO OF THE NAME AND INSTRUCTION PLATE SO THAT IT WILL BE AVAILABLE TO YOU WHEN ORDERING PARTS.

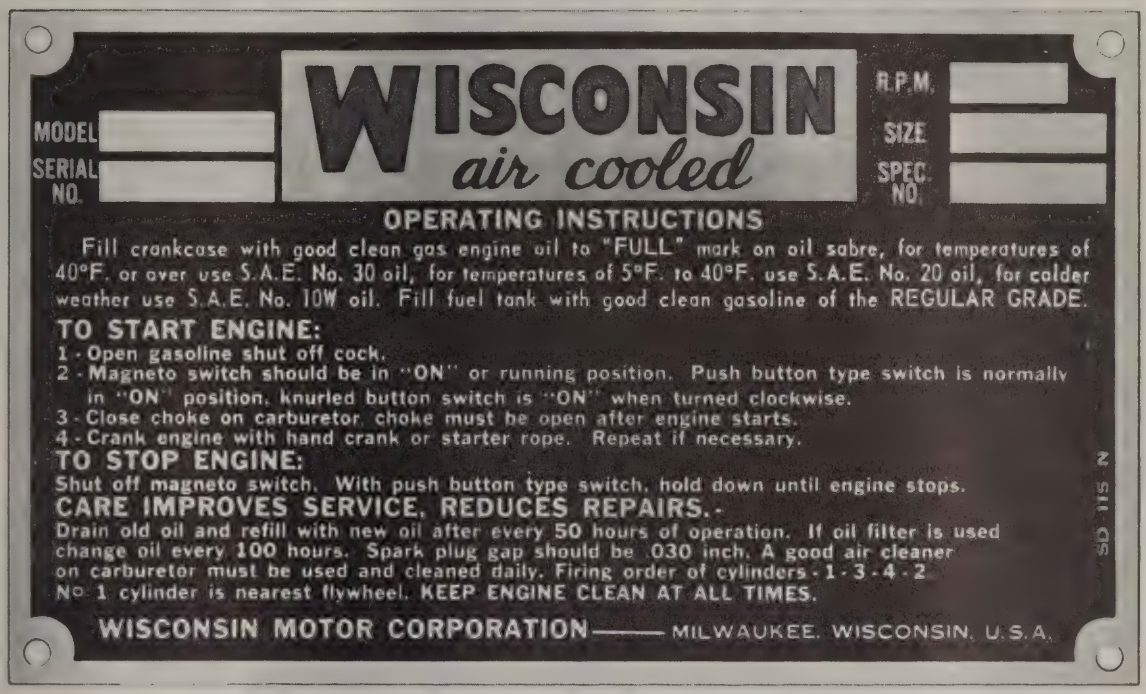


TO INSURE PROMPT AND ACCURATE SERVICE, THE FOLLOWING INFORMATION MUST ALSO BE GIVEN.

1. State exactly, quantity of each part and part number.

2. State definitely, whether parts are to be shipped by express, freight or parcel post.

## SERVICE FACILITIES

Approved engine service stations, located throughout the U.S. and foreign countries, have been carefully selected by the WISCONSIN MOTOR CORPORATION in order to assure complete and efficient repair and inspection service to owners of Wisconsin Air Cooled Engines. These service stations, equipped and trained for complete engine repair, also stock parts to facilitate immediate delivery for all Wisconsin Air Cooled Engines.

A DIRECTORY OF SERVICE STATIONS CAN BE FOUND IN THE BACK OF THIS MANUAL.

## PARTS RETURNED FOR CREDIT

Before returning any parts, write a letter to the company from whom the parts were purchased, giving an exact list and description of the materials, why you wish to return them, whether for repairs, credit, or replacement, and also the model, specification and serial numbers of the engine from which the parts were taken. If authority is granted for their return, transportation charges must be prepaid and sender's name marked on the outside of the box or package.

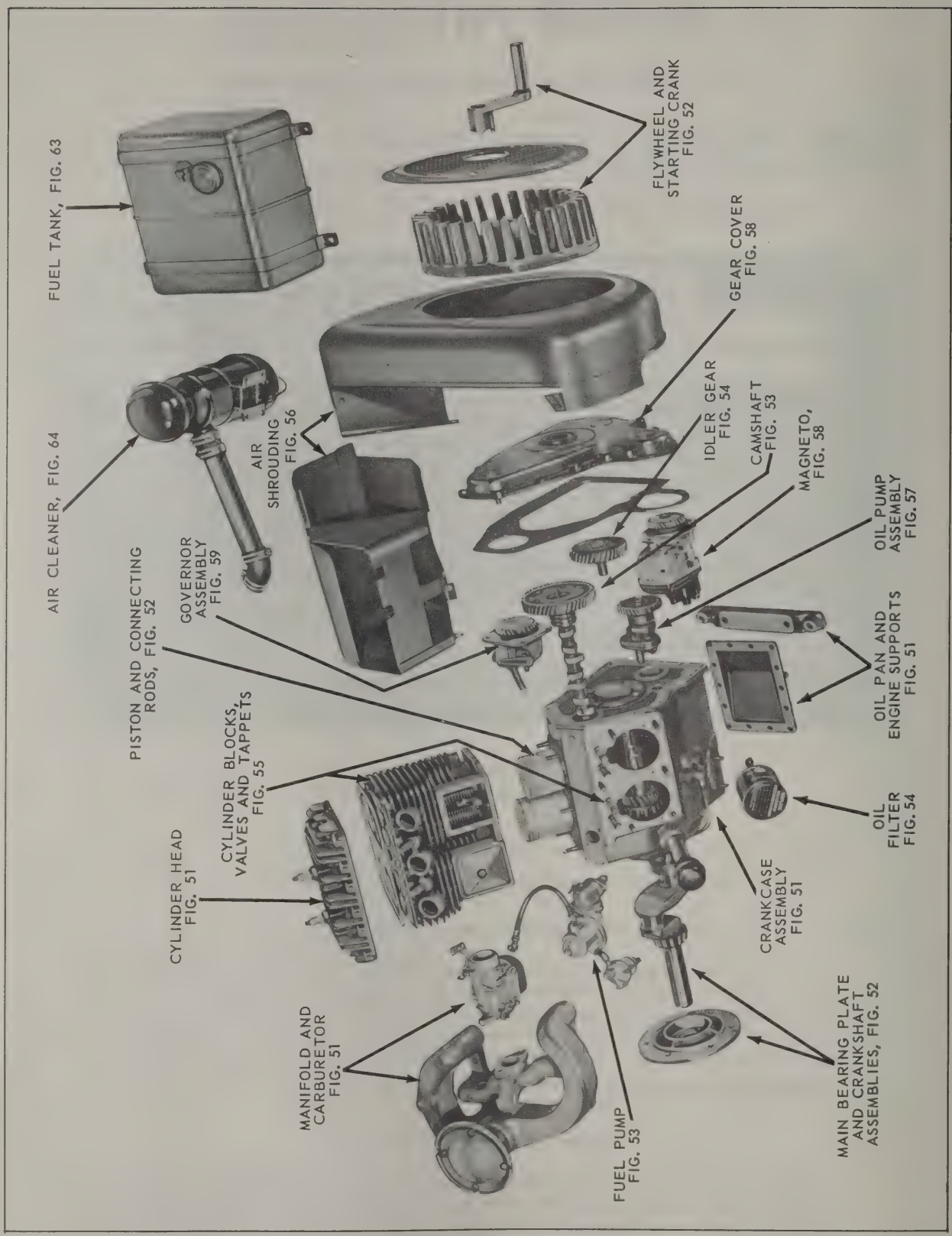


164957C

**Fig. 50, EXPLODED VIEW OF ENGINE**

Refer to figure numbers for break down of parts.

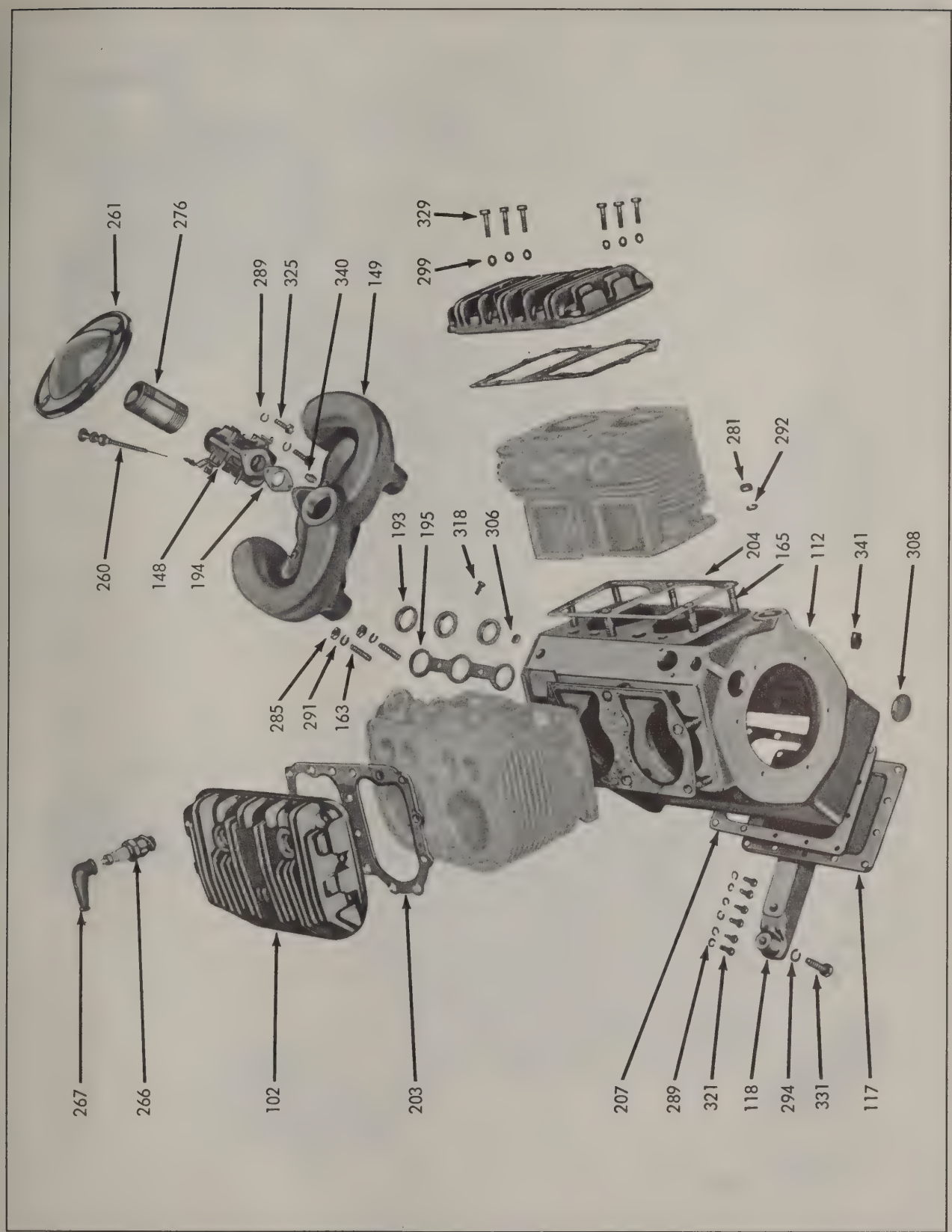


129784C-1

**Fig. 51, MANIFOLD AND CRANKCASE GROUP**

Parts are identified by reference number. See parts list for correct part number.

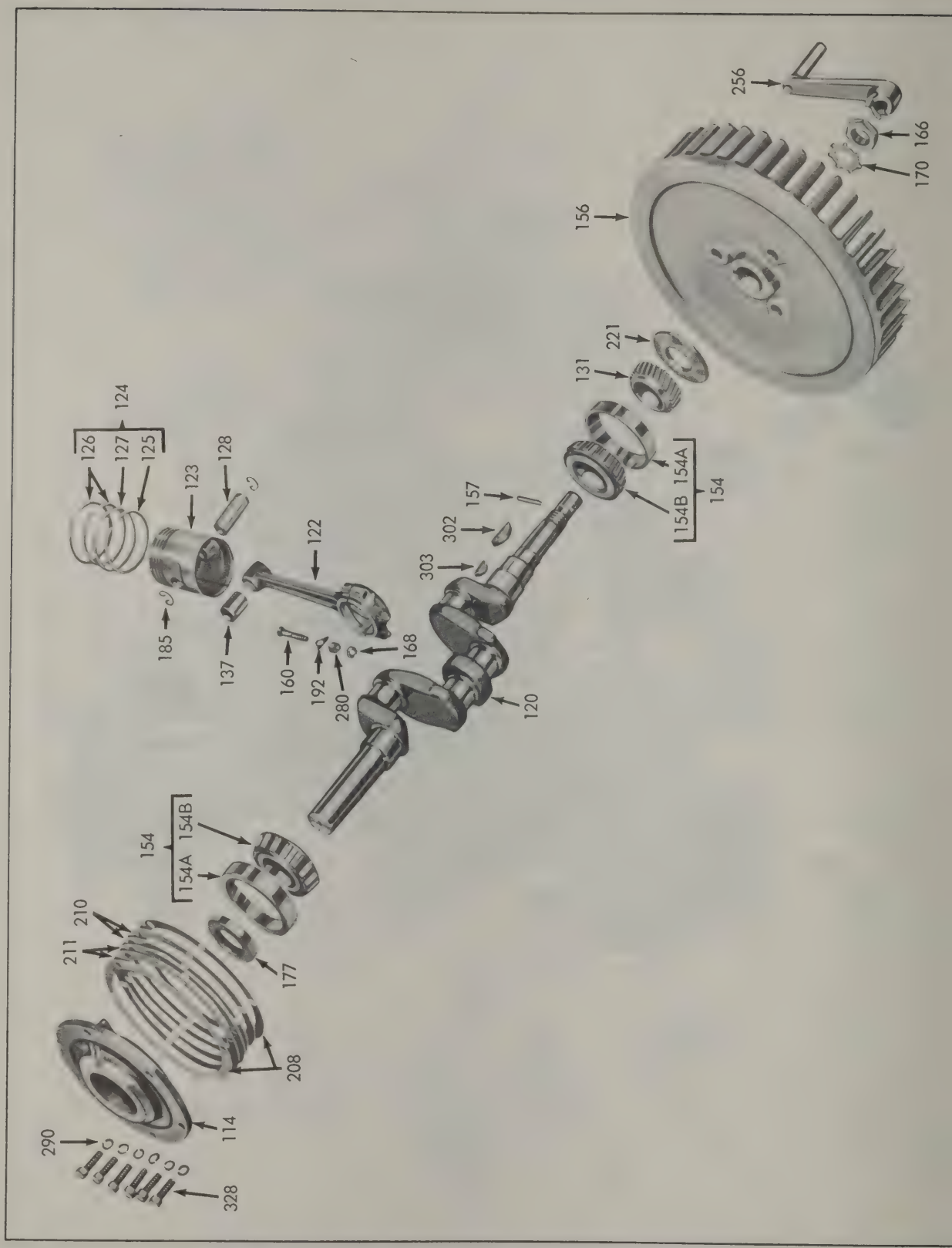


Fig. 52, CRANKSHAFT, PISTON AND CONNECTING ROD GROUP

203937C

Parts are identified by reference number. See parts list for correct part number.

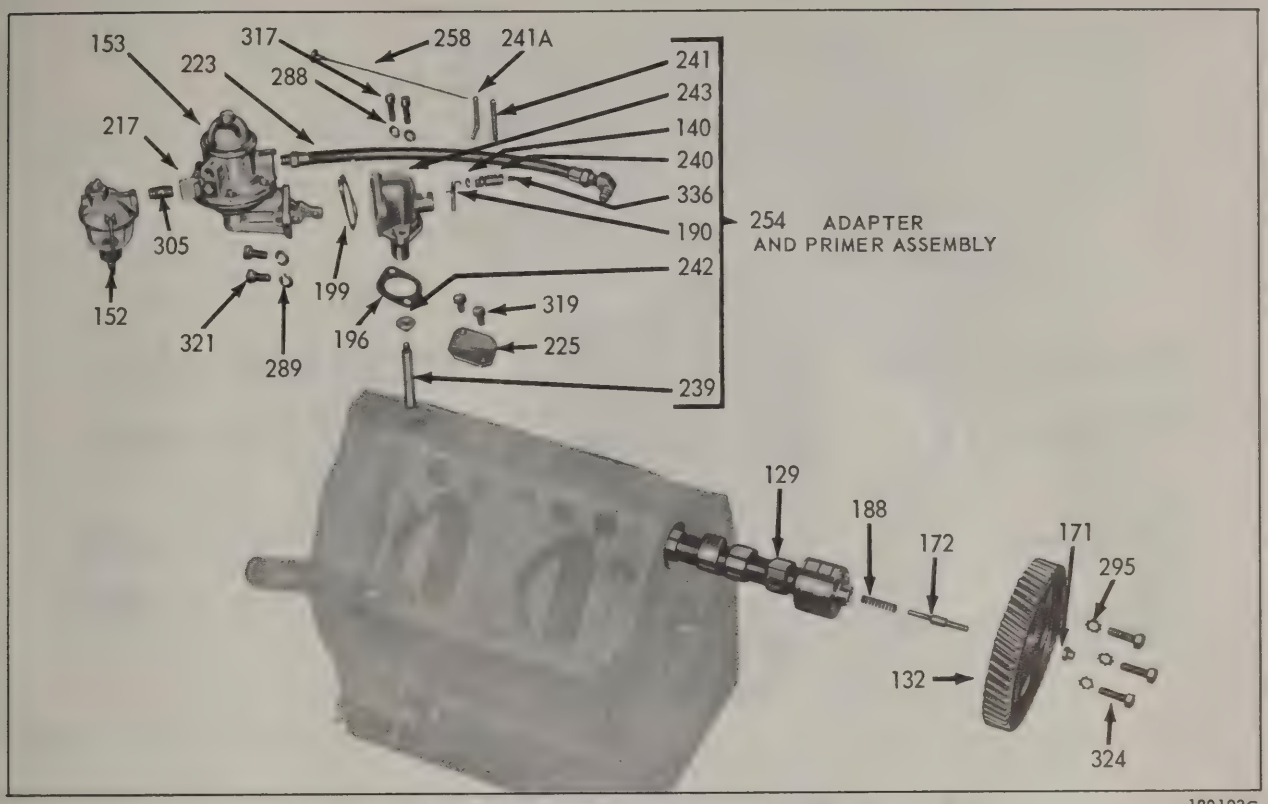


Fig. 53, CAMSHAFT AND FUEL PUMP MOUNTING GROUP

180193C

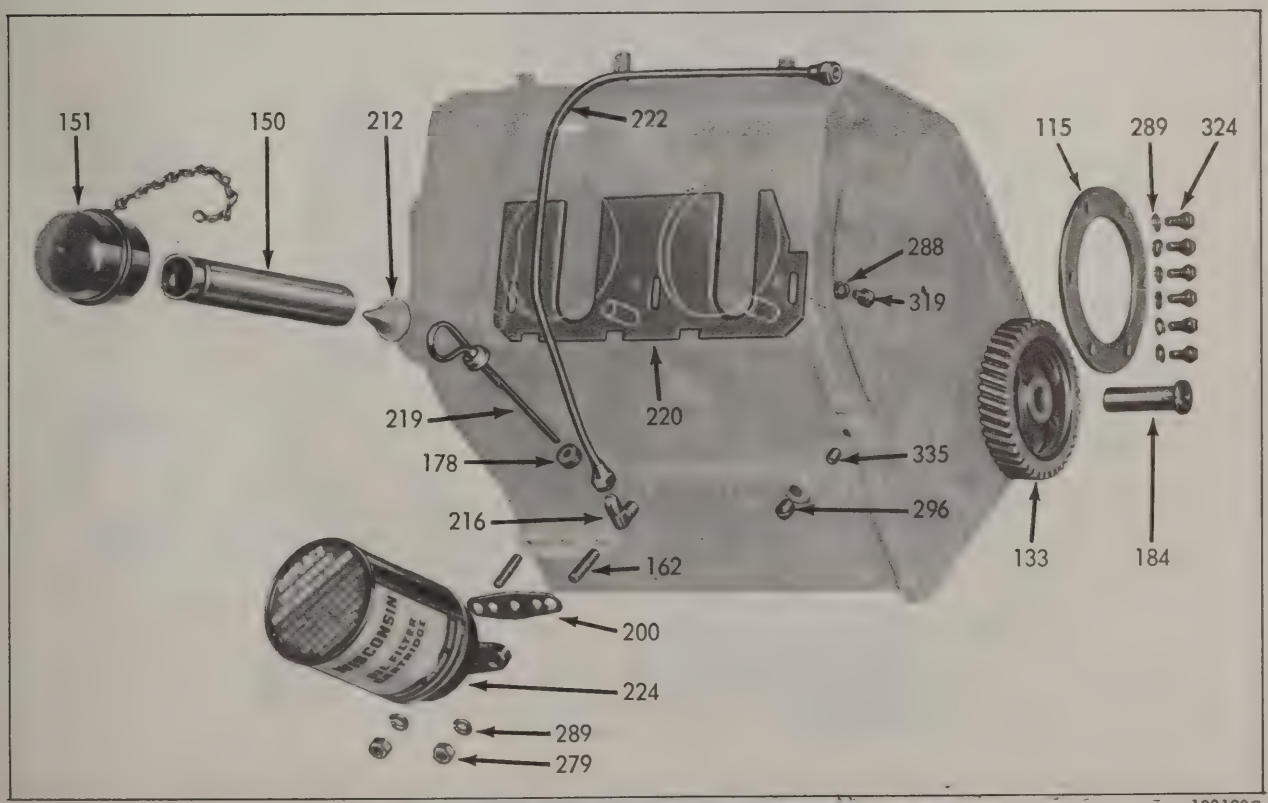


Fig. 54, OIL FILTER AND OIL FILLER MOUNTING GROUP

180190C

Parts are identified by reference number. See parts list for correct part number.

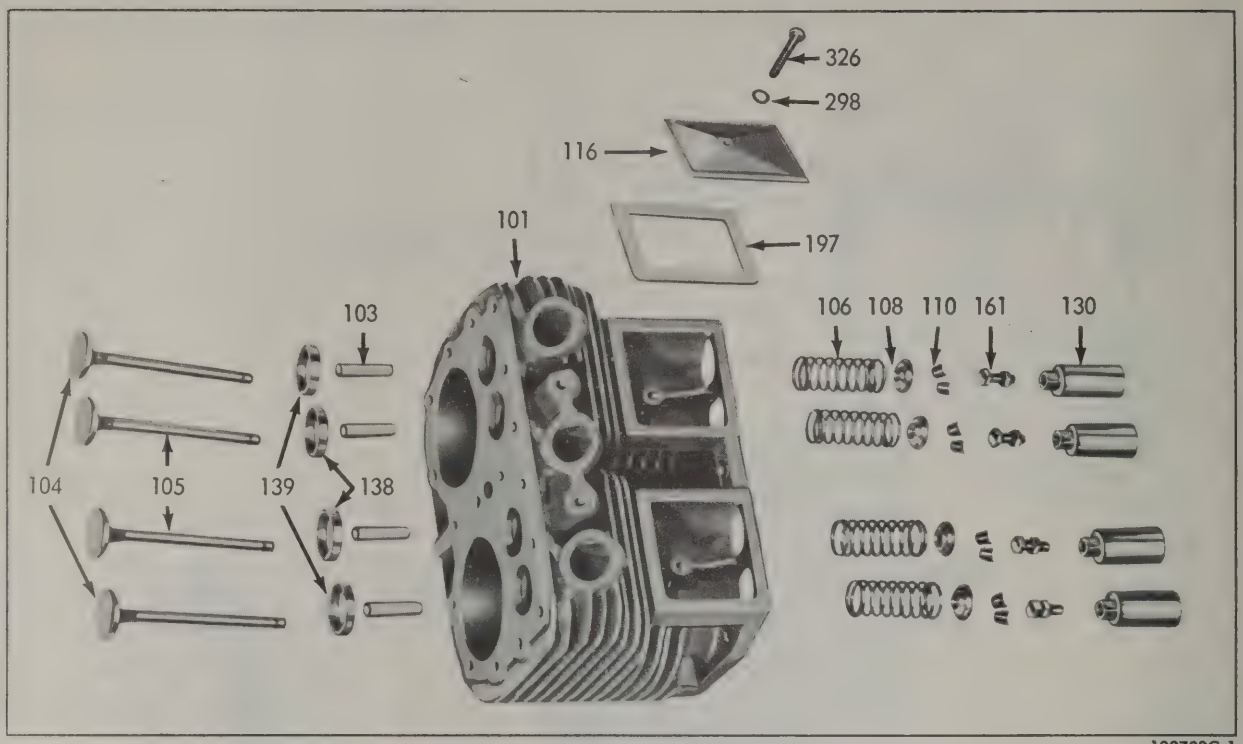


129782C-1

Fig. 55, CYLINDER BLOCK ASSEMBLY

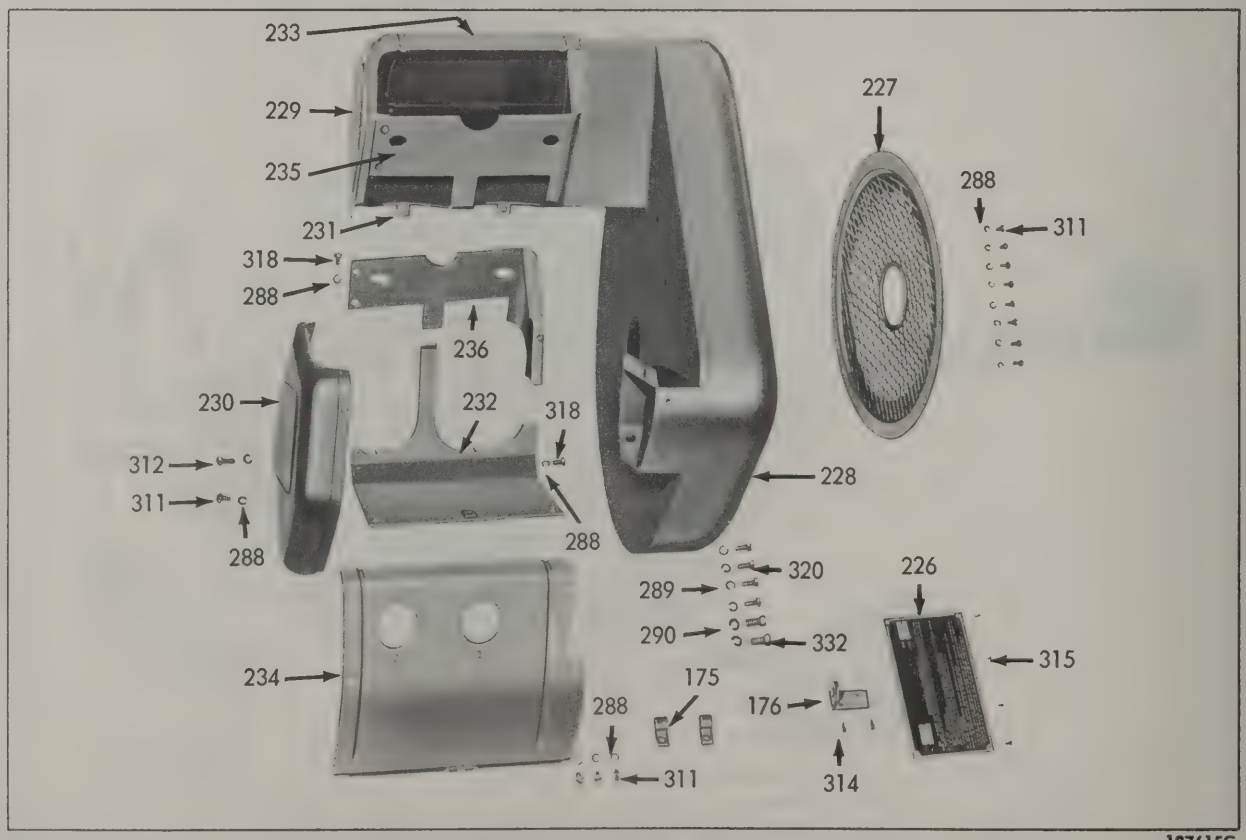


187615C

Fig. 56, AIR SHROUDING

Parts are identified by reference number. See parts list for correct part number.

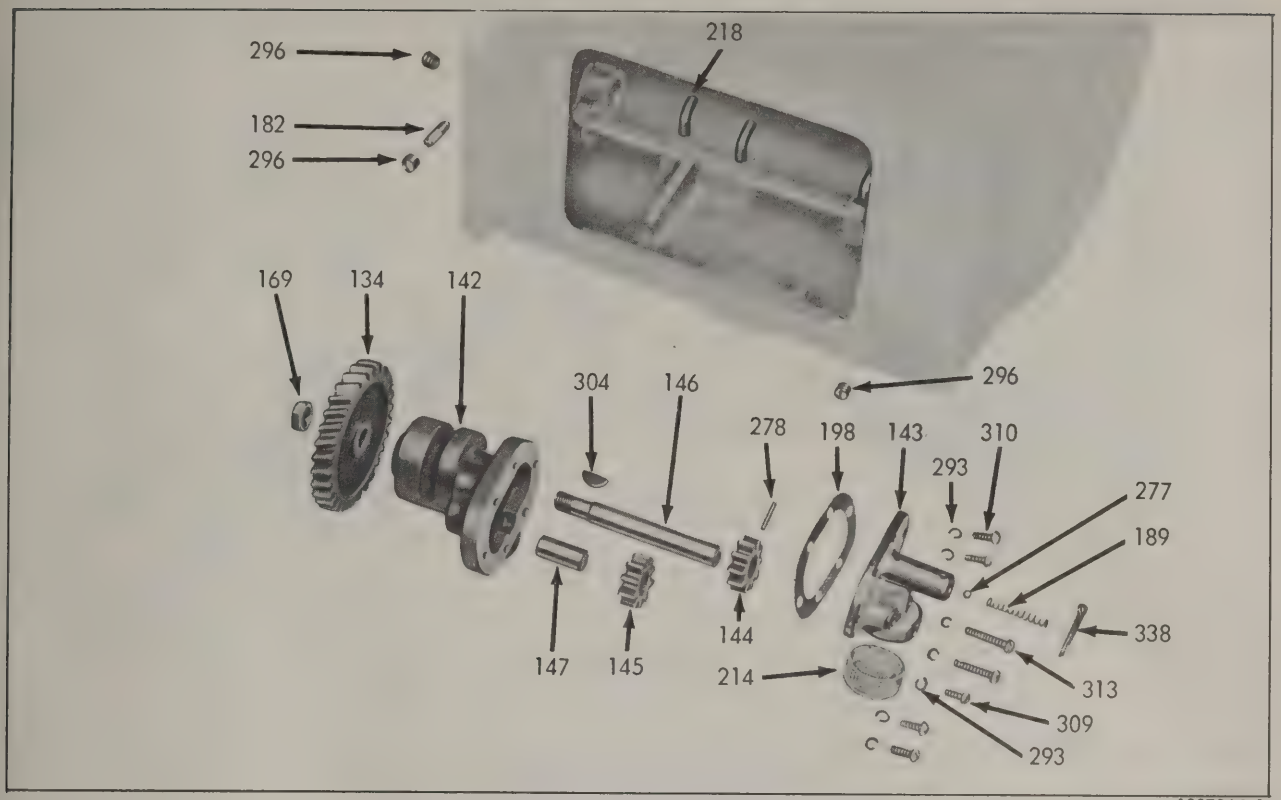


Fig. 57, Ref. No. 141, OIL PUMP ASSEMBLY

129786C-1

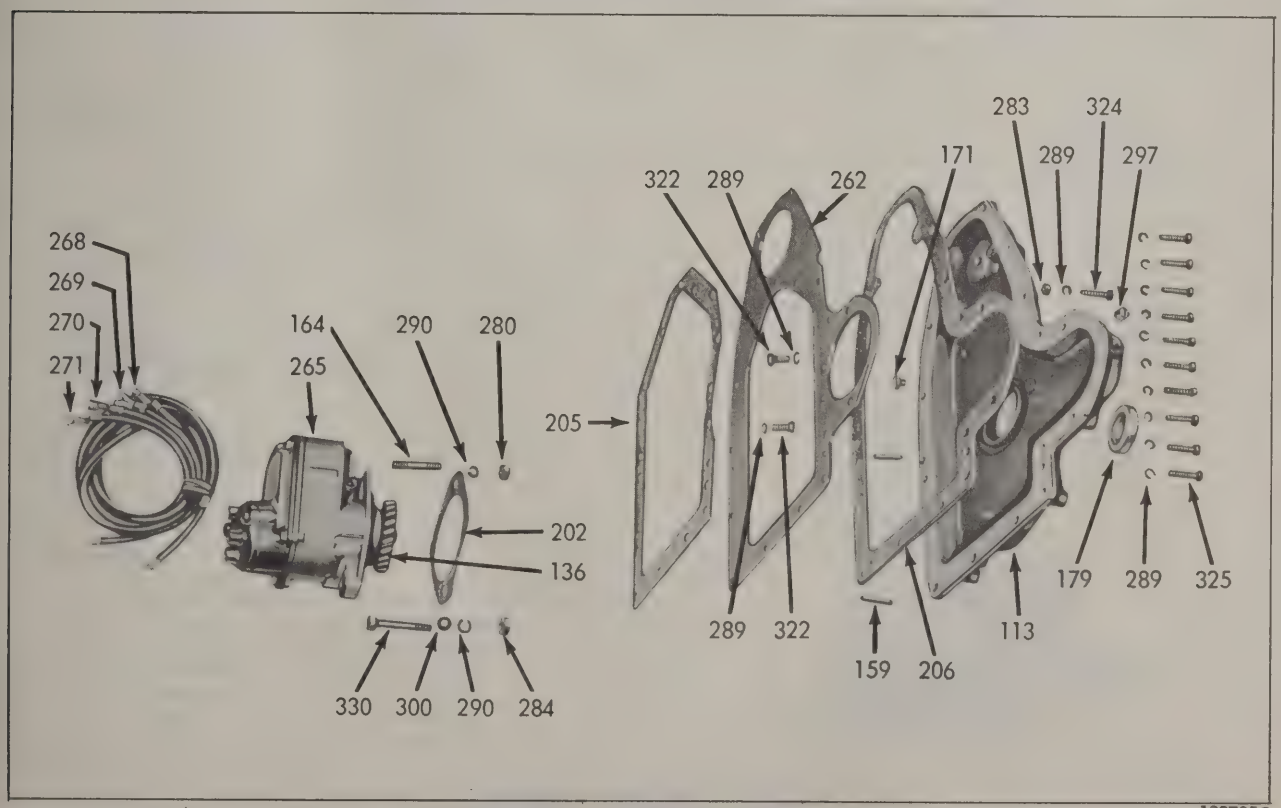


Fig. 58, MAGNETO AND GEAR COVER GROUP

129785C

Parts are identified by reference number. See parts list for correct part number.

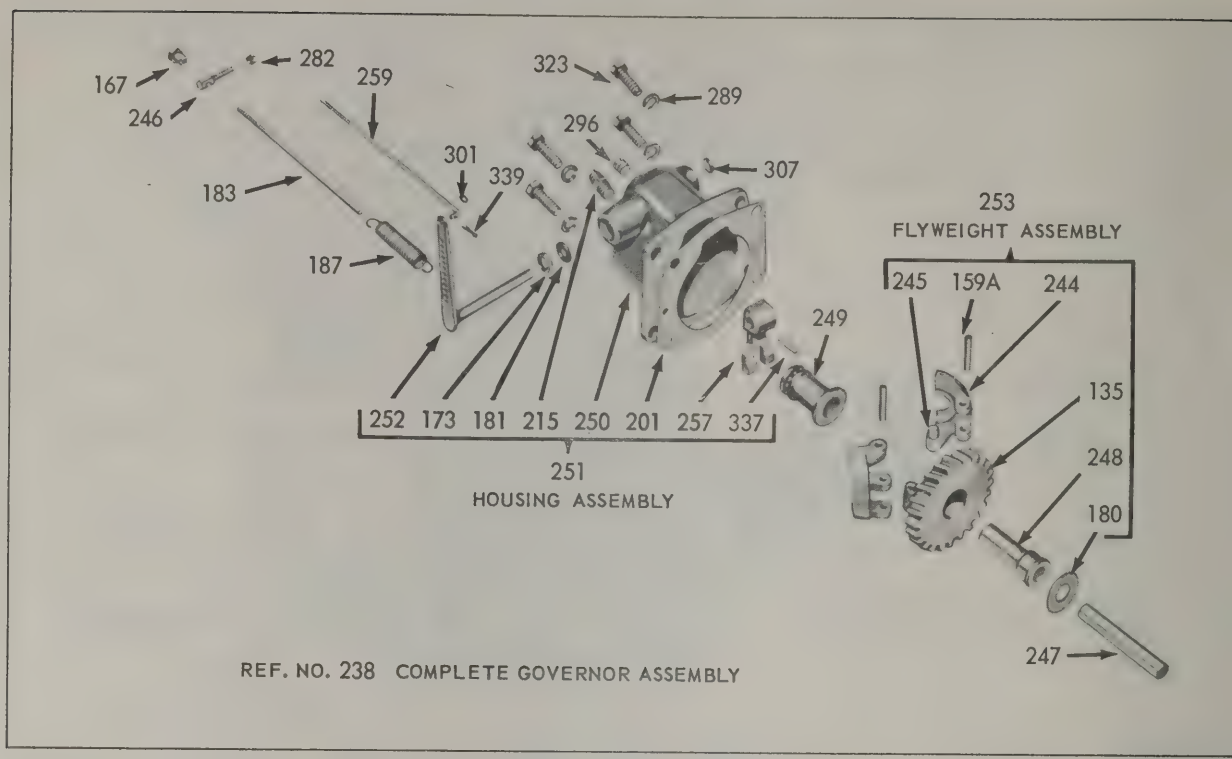


**Fig. 59, GOVERNOR ASSEMBLY**

129792C-1

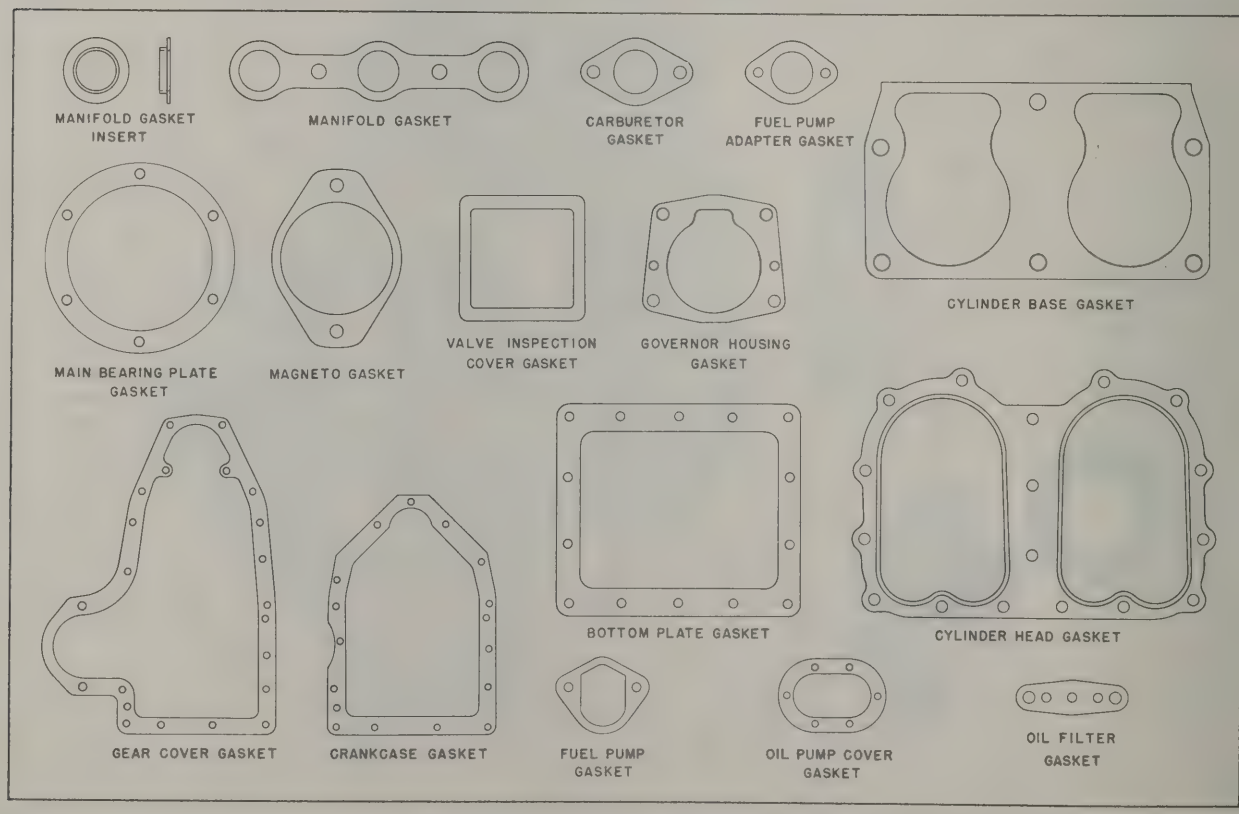


**Fig. 60, Ref. No. 191, GASKET SET**

Parts are identified by reference number. See parts list for correct part number.

# PARTS LIST
## MODEL VP4D, 4 CYLINDER STANDARD ENGINE

**NOTE:** The Model **VP4D** engine, and the **VP4** which it replaces, are identical except that the **VP4D** has **STELLITE** exhaust valves and seats. The cylinder block assembly, valves, springs and inserts for the **VP4**, which are the only different parts, are identified in the parts list.

The following parts are for a standard engine without house. If power unit house parts are required, refer to Page 44.

| Ref. No. | Part Number | Description | No. Req | Net Wt. Lb | Net Wt. Oz |
|---|---|---|---|---|---|
| 101 | AA-90A-S3 | **CYLINDER BLOCK ASSEMBLY** ..... Complete — consisting of:<br>1 AA-90-A Cylinder block<br>4 AD-42 Valve stem guide<br>2 AE-76-D Exhaust Valves, **Stellite**<br>2 AE-76-E Inlet valves<br>4 AF-52 Valve springs, inlet<br>4 AG-26 Spring seats, inlet<br>4 AH-9 Retainer locks<br>2 BH-103 Valve inspection cover<br>2 HG-150-A Valve seat inserts, inlet<br>2 HG-150-D Valve seat inserts, **Stellite** exhaust<br>2 PC-251 Studs<br>2 PH-14 Washers<br>2 QD-482 Gaskets<br>2 XD-23 Screws | 2 | 44 | |
| | | **AA-90A-S1** without **Stellite** exhaust valves and seats for **VP4** engine. | | | |
| | AA-90A-S4 | **CYLINDER BLOCK** with valve seat inserts — consisting of:<br>1 AA-90-A Cylinder block<br>4 AD-42 Valve stem guide<br>2 HG-150-A Valve seat inserts, inlet<br>2 HG-150-D Valve seat inserts, **Stellite** exhaust<br>2 PC-251 Studs | | 41 | |
| | | **AA-90A-S2** without **Stellite** exhaust valve seat inserts for **VP4** engine. | | | |
| 102 | AB-91-D | **CYLINDER HEAD** ..... AB-91 and AB-91-B repl'd by AB-91-D. | 2 | 14 | |
| 103 | AD-42 | **VALVE STEM GUIDE,** inlet and exhaust For engines beginning with Serial No. 2,340,498. | 8 | | 2 |
| 104 | AE-76-D | **EXHAUST VALVE, STELLITE** ..... | 4 | | 4 |
| 105 | AE-76-E | **INLET VALVE** ..... On **VP4** engines, AE-76-E is used for inlet and exhaust. | 4 | | 4 |
| 106 | AF-52 | **VALVE SPRING,** (3.119" approx. free length)..... AF-50 for **VP4** engine. | 8 | | 2 |
| 108 | AG-26 | **VALVE SPRING SEAT** ..... | 8 | | 1 |
| 110 | AH-9 | **LOCK** for valve spring seat ..... | 8 pr | | 1 |
| 112 | See Fig. 1 | **CRANKCASE ASSEMBLY** ..... Consisting of:<br>1 Crankcase<br>1 LJ-300-A Oil filler tube<br>2 PC-112 Studs<br>12 PC-435 Studs<br>8 PF-18 Plugs<br>1 RC-91 Screen<br>4 RF-1121 Oil spray nozzles<br>2 SA-26 Plugs<br>1 SA-58 Plug<br>**NOTE:** The part number of the crankcase is stamped on the case in the location shown in **Fig. 1. ORDER BY THIS NUMBER** and by giving the Model, Specification and Serial Number of the engine. | 1 | 68 | |

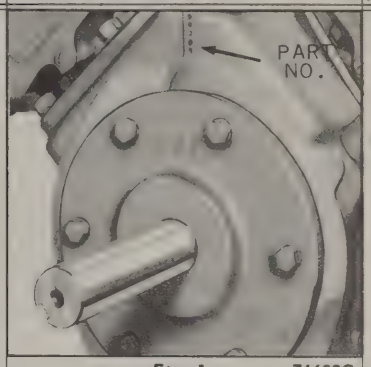


Fig. 1 76638C

| Ref. No. | Part Number | Description | No. Req | Net Wt. Lb | Net Wt. Oz |
|---|---|---|---|---|---|
| 113 | BD-101-S1 | **GEAR COVER ASSEMBLY** ..... Consisting of: 1 BD-101 Gear cover<br>1 PF-25 Plug 1 PH-269 Seal<br>1 PF-52 Button 1 TC-388-1 Shaft | 1 | 15 | |
| 114 | BG-193-3-S2 | **MAIN BEARING PLATE ASSEMBLY** .... take-off end — consisting of:<br>1 BG-193-A Bearing plate<br>1 ME-98-1 Bearing cup<br>1 PH-202 Oil seal | 1 | 6 | |
| 115 | BG-223 | **BEARING RETAINER PLATE** ..... flywheel end. | 1 | | 10 |
| 116 | BH-103 | **VALVE TAPPET INSPECTION PLATE** | 4 | | 4 |
| 117 | BH-155-A | **CRANKCASE BOTTOM COVER PLATE** | 1 | 2 | |
| 118 | BK-72 | **ENGINE SUPPORT** (cast iron) ..... | 2 | 5 | 10 |
| 120 | See Fig. 2 | **CRANKSHAFT ASSEMBLY** ..... Consisting of: 1 Crankshaft<br>1 GA-35A-1 Gear 1 PL-49 Key<br>2 ME-98 Br'gs. 1 RK-173 Sling<br>**NOTE:** Beginning with engine Serial No. 771501 the crankshaft crank pins are 1-7/8" in diameter and DA-62-S1 connecting rods are used. Up to and including engine No. 771500 the crankshaft crank pins were 1-3/4" in diameter and DA-54A-S1 connecting rods were used. The part number of the crankshaft will be found stamped on the cheek facing the take-off end of the shaft as illustrated in **Fig. 2. ORDER BY THIS NUMBER** and by giving the Model, Specification and Serial Number of the engine. | 1 | 40 | |

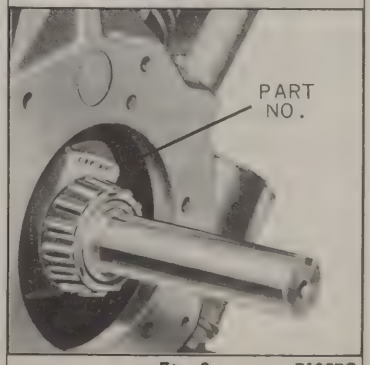


Fig. 2 71057C

Order parts from nearest ***SERVICE STATION*** shown in directory following parts list.

***IMPORTANT:*** Always give Model, Specification and Serial Numbers as shown on name plate.

# MODEL VP4D PARTS LIST

| Ref. No. | Part Number | Description | No. Req | Net Wt. Lb | Net Wt. Oz |
|---|---|---|---|---|---|
| 122 | DA-62-S1 | **CONNECTING ROD ASSEMBLY** (1-7/8" dia. crank pin, for engines beginning with Serial No. 771501). Consisting of: 1 DA-62 Rod (Not serviced separately) 1 HG-131A Bushing 2 PB-146-1 Bolts 2 PD-11 Nuts 2 PD-182 Palnuts 2 QA-115 Shims | 4 | 3 | 8 |
| | | **DA-54A-S1** (1¾" dia. crank pin, for engines to and including Serial No. 771500) | | | |
| | | **NOTE:** A price allowance is made on connecting rods in which bearings have been burned out, but which are otherwise complete, and in condition to be rebabbitted. | | | |
| | | Connecting rods are also furnished .010", .020" and .030" undersize. | | | |
| 123 | DB-183-D | **PISTON,** standard size, aluminum ..... DB-183-A and DB-183-C replaced by DB-183-D. Pistons are also furnished .005", .010", .020", .030" oversize and semi-finished. | 4 | 1 | 2 |
| 124 | DR-15 | **PISTON RING SET,** standard size ..... Consisting of: | 1 | | 10 |
| 125 | DC-111 | **OIL RING** ..... | 4 | | 1 |
| 126 | DC-126-A | **COMPRESSION RING** ..... | 8 | | 1 |
| 127 | DC-126A-1 | **SCRAPER RING** ..... Piston rings and ring sets are also furnished .005", .010", .020" and .030" oversize. | 4 | | 1 |
| 128 | DE-59 | **PISTON PIN,** standard size ..... Piston pins are also furnished .005", .010", .020" and .030" oversize. | 4 | | 3 |
| 129 | EA-104 | **CAMSHAFT** ..... | 1 | 4 | |
| 130 | F-60 | **VALVE TAPPET** with PB-169A lock-screw ..... F-58A-S1 and F-58 Tappets replaced by F-60. | 8 | | 4 |
| 131 | GA-35A-1 | **CRANKSHAFT GEAR** ..... GA-37, replaced by GA-35A-1. | 1 | 1 | |
| 132 | GB-46 | **CAMSHAFT GEAR** ..... | 1 | 2 | 14 |
| 133 | GC-28 | **IDLER GEAR** ..... | 1 | 2 | 1 |
| 134 | GD-94-C | **OIL PUMP GEAR** ..... | 1 | | 11 |
| 135 | GD-100-A | **GOVERNOR GEAR** ..... | 1 | | 7 |
| 136 | GD-103 | **MAGNETO GEAR** ..... | 1 | | 13 |
| 137 | HG-131-A-1 | **PISTON PIN BUSHING** ..... | 4 | | 1 |
| 138 | HG-150-A | **VALVE SEAT INSERT,** inlet ..... On **VP4** engines, HG-150-A is used for inlet and exhaust. | 4 | | 1 |
| 139 | HG-150-D | **VALVE SEAT INSERT,** Stellite exhaust | 4 | | 1 |
| 140 | JK-50 | **PACKING RING** ..... For fuel pump primer shaft. | 1 | | 1 |
| 141 | K-95-D | **OIL PUMP ASSEMBLY,** complete ..... | 1 | 3 | 13 |

| Ref. No. | Part Number | Description | No. Req | Net Wt. Lb | Net Wt. Oz |
|---|---|---|---|---|---|
| 142 | KA-61A-1-S1 | **OIL PUMP BODY ASSEMBLY** ..... Consisting of: 1 KA-61A-1 Body 1 KD-122 Stub shaft | 1 | 2 | |
| 143 | KB-42-S2 | **OIL PUMP COVER ASSEMBLY** ..... Consisting of: 1 KB-42 Cover 1 ME-60 Check ball 1 PE-14 Washer 1 PM-111 Spring 1 RD-112 Screen 1 XA-7 Screw 1 XI-16 Cotter pin | 1 | 1 | |
| 144 | KC-56-1 | **OIL PUMP GEAR** (driver) ..... KC-54-1, replaced by KC-56-1. | 1 | | |
| 145 | KC-56-2 | **OIL PUMP GEAR** (driven) ..... KC-55-1, replaced by KC-56-2. | 1 | | |
| 146 | KD-121-S1 | **OIL PUMP DRIVE SHAFT ASSEMBLY** .. Consisting of: 1 PA-64 Pin 1 KC-56-1 Gear 1 KD-121 Shaft | 1 | | |
| 147 | KD-122 | **OIL PUMP STUB SHAFT** ..... | 1 | | |
| 148 | L-54-J-1 | **CARBURETOR,** Marvel-Schebler VH-69 L-54, L-54A, L-54C, L-54D, L-54J carburetors, replaced by L-54J-1. | 1 | 1 | |
| | Optional L-57 | **CARBURETOR,** Zenith Model 87A8, No. 11288-A ..... **NOTE:** The above are standard carburetors and either one may be used on this model of engine. Refer to stamped part or model number on carburetor for replacement carburetor or parts. | 1 | 2 | |
| | | See carburetor bulletins in back of manual for service replacement parts list. | | | |
| 149 | LD-240 | **INLET** and **EXHAUST MANIFOLD** ..... For open engine. | 1 | 19 | |
| | LD-240-1 | **MANIFOLD** for engines enclosed with sheet metal house (power unit) ..... | | | |
| 150 | LJ-300-A | **OIL FILLER TUBE** ..... | 1 | | |
| 151 | LO-60-1 | **OIL FILLER** and **BREATHER CAP** ..... | 1 | | |
| 152 | LP-19-B | **FUEL STRAINER,** Tillotson OW-444 .... **NOTE:** See illustration in back of manual for service parts list of fuel strainer. | 1 | | |
| 153 | LP-38 | **FUEL PUMP,** Blackstone GI-195 ..... | 1 | 1 | 1 |
| | LQ-21-B | **DIAPHRAGM KIT** for fuel pump ..... **NOTE:** Refer to fuel pump instruction sheet in back of manual for maintenance and repair. | 1 | | |
| 154 | ME-98 | **MAIN BEARING ASSEMBLY** ..... Consisting of: | 2 | 2 | 1 |
| 154A | | 1 ME-98-1 Cup, Timken No. 453A ..... | | | 1 |
| 154B | | 1 ME-98-2 Cone, Timken No. 455S ..... | | 1 | 1 |

Order parts from nearest ***SERVICE STATION*** shown in directory following parts list.

***IMPORTANT:*** Always give Model, Specification and Serial Numbers as shown on name plate.

# MODEL VP4D PARTS LIST

| Ref. No. | Part Number | Description | No. Req | Net Wt. Lb | Net Wt. Oz |
|---|---|---|---|---|---|
| 156 | NC-146 | **FLYWHEEL,** Standard | 1 | 46 | |
| | | NC-146-1-S1 Flywheel for engines with electric starter | | 47 | |
| | | Consisting of: 1 GH-43 Ring gear<br>1 NC-146-1 Flywheel<br>3 XE-17 Set screws | | | |
| 157 | PA-334 | **PIN** for starting crank<br>PA-275, replaced by PA-334. | 1 | | 1 |
| 159 | PA-291 | **DOWEL PIN** for gear cover to case | 2 | | 1 |
| 159A | PA-340 | **ROLL PIN** for governor flyweights<br>XJ-46 Rivets and PA-265 Pins, replaced by PA-340. | 2 | | 1 |
| 160 | PB-146-1-S1 | **CONNECTING ROD BOLT ASSEMBLY**<br>Consisting of: 1 PB-146-1 Bolt<br>1 PD-11 Nut<br>1 PD-182 Palnut | 8 | | 2 |
| 161 | PB-169-A | **VALVE TAPPET ADJUSTING SCREW**<br>For F-60 Tappet.<br>PB-147 with PD-141 Nut for obsolete F-58A-S1 Tappet. | 8 | | 1 |
| 162 | PC-112 | **STUD** for mounting oil filter | 2 | | 1 |
| 163 | PC-251 | **STUD** for mounting manifold to cylinder block | 4 | | 1 |
| 164 | PC-429 | **STUD** for mounting magneto (upper hole) | 1 | | 2 |
| 165 | PC-435 | **STUD** for mounting cylinder block to case | 12 | | 2 |
| 166 | PD-157 | **NUT** for mounting flywheel | 1 | | 2 |
| 167 | PD-173-A | **NUT** for governor spring adjusting screw | 1 | | 1 |
| 168 | PD-182 | **PALNUT** for connecting rod bolts, 3/8"-24 | 8 | | 1 |
| 169 | PD-195 | **NUT** for mounting oil pump gear<br>PD-100-1 Nut and XI-9 Cotter pin, replaced by PD-195. | 1 | | 1 |
| 170 | PE-65-1 | **STAR LOCKWASHER**<br>For mounting flywheel. | 1 | | 1 |
| 171 | PF-52 | **CAMSHAFT THRUST PLUNGER BUTTON** | 1 | | 1 |
| 172 | PF-101 | **CAMSHAFT THRUST PLUNGER** | 1 | | 1 |
| 173 | PF-118 | **OIL SEAL RETAINER**<br>For governor cross shaft. | 1 | | 1 |
| 175 | PG-314 | **CLIP** for spark plug cable | 2 | | 1 |
| 176 | PG-475 | **BRACKET** for choke control | 1 | | 1 |
| 177 | PH-202 | **MAIN BEARING OIL SEAL** take-off end | 1 | | 3 |
| 178 | PH-245 | **CORK WASHER** for oil sabre | 1 | | 1 |
| 179 | PH-269 | **MAIN BEARING OIL SEAL** flywheel end | 1 | | 2 |
| 180 | PH-313-A | **WASHER** for governor gear bushing | 1 | | 1 |
| 181 | PH-318-A | **CORK OIL SEAL** for gov. cross shaft | 1 | | 1 |
| 182 | PI-143-B | **OIL PUMP LOCKSCREW**<br>PI-143-A, replaced by PI-143-B. | 1 | | 1 |
| 183 | PI-145 | **SCREW** for adjusting governor spring | 1 | | 3 |
| 184 | PJ-105 | **STUD** for idler gear | 1 | | 5 |
| 185 | PK-37 | **RETAINING RING** for piston pin | 8 | | 1 |

| Ref. No. | Part Number | Description | No. Req | Net Wt. Lb | Net Wt. Oz |
|---|---|---|---|---|---|
| 187 | PM-76 | **GOVERNOR SPRING** | 1 | | 1 |
| 188 | PM-108 | **SPRING** for camshaft thrust plunger | 1 | | 1 |
| 189 | PM-111 | **SPRING** for oil pump relief valve | 1 | | 1 |
| 190 | PM-145 | **SPRING** for fuel pump primer handle | 1 | | 1 |
| 191 | Q-18 | **GASKET SET**<br>Consisting of:<br>6 QB-83 1 QD-538-A 2 QD-632<br>3 QC-12-A 1 QD-595-A 1 QD-633<br>2 QC-62 1 QD-615-A 1 QD-634<br>1 QD-67 1 QD-616 1 QD-635<br>4 QD-482 2 QD-631 2 QD-636<br>1 QD-535 | 1 | | 1 |
| 192 | QA-115 | **CONNECTING ROD SHIM** | 8 | | 1 |
| 193 | QB-83 | **INSERT** for manifold gasket | 6 | | 1 |
| 194 | QC-12-A | **GASKET** for carburetor | 3 | | 1 |
| 195 | QC-62 | **GASKET** for manifold to cylinder block | 2 | | 1 |
| 196 | QD-67 | **GASKET** for fuel pump adapter | 1 | | 1 |
| 197 | QD-482 | **GASKET** for valve inspection cover | 4 | | 1 |
| 198 | QD-535 | **GASKET** for oil pump cover | 1 | | 1 |
| 199 | QD-538-A | **GASKET** for mounting fuel pump | 1 | | 1 |
| 200 | QD-595-A | **GASKET** for mounting oil filter | 1 | | 1 |
| 201 | QD-615-A | **GASKET** for governor housing | 1 | | 1 |
| 202 | QD-616 | **GASKET** for mounting magneto | 1 | | 1 |
| 203 | QD-631 | **GASKET** for cylinder head | 2 | | 1 |
| 204 | QD-632 | **GASKET** for cylinder base | 2 | | 1 |
| 205 | QD-633 | **GASKET** for crankcase to spacer | 1 | | 1 |
| 206 | QD-634 | **GASKET** for gear cover | 1 | | 1 |
| 207 | QD-635 | **GASKET** for bottom cover plate | 1 | | 1 |
| 208 | QD-636 | **GASKET** for bearing plate—take-off end, .003" thick | 2 | | 1 |
| 210 | QF-67 | **SHIM** for bearing plate—take-off end, .006" thick | 2 | | 1 |
| 211 | QF-67-A | **SHIM** for bearing plate—take-off end, .014" thick | 2 | | 1 |
| 212 | RC-91 | **OIL FILLER SCREEN** | 1 | | 1 |
| 214 | RD-112 | **OIL PUMP SCREEN** | 1 | | 1 |
| 215 | RF-269-2 | **FITTING** in governor housing for oil line | 1 | | 1 |
| 216 | RF-270 | **ELBOW** in crankcase for oil line to governor | 1 | | 1 |
| 217 | RF-1096 | **STREET ELBOW,** 45°, in fuel pump inlet<br>XK-38, 1/8" x 90° street elbow for engines with fuel strainer. | 1 | | 1 |
| 218 | RF-1121 | **OIL SPRAY NOZZLE** | 4 | | 1 |
| 219 | RJ-143-S1 | **OIL SABRE** with PH-245 cork | 1 | | 2 |
| 220 | RK-171 | **CRANKCASE SPLASH PLATE** | 2 | | 4 |
| 221 | RK-173 | **OIL SLING** for crankshaft | 1 | | 2 |
| 222 | RM-536 | **OIL LINE** tubing with nuts, crankcase to governor | 1 | | 4 |

Order parts from nearest ***SERVICE STATION*** shown in directory following parts list.

***IMPORTANT***: Always give Model, Specification and Serial Numbers as shown on name plate.

# MODEL VP4D PARTS LIST

| Ref. No. | Part Number | Description | No. Req | Net Wt. Lb | Net Wt. Oz |
|---|---|---|---|---|---|
| 223 | RM-1201-A | **FUEL LINE,** pump to carburetor | 1 | | 4 |
| 224 | RV-29-A | **OIL FILTER ASSEMBLY** | 1 | 1 | 13 |
| | | Consisting of: | | | |
| | | RV-29 Cartridge | 1 | | 12 |
| | | QD-685 Cartridge gasket | 1 | | 1 |
| | | Body (Not serviced separately). | | | |
| | | RV-27-A, replaced by RV-29-A. | | | |
| | | RV-27-1 Cartridge, replaced by RV-29. | | | |
| 225 | SA-69 | **COVER** for fuel pump pad, for engines without fuel pump | 1 | | 2 |
| 226 | SD-115-N | **ENGINE INSTRUCTION** and **NAME PLATE** | 1 | | 1 |
| | | **NOTE:** When ordering name plate, give Model, Specification Number and Serial Number for correct stamping. | | | |
| 227 | SE-48 | **SCREEN** for flywheel shroud | 1 | 1 | 1 |
| 228 | SE-124 | **FLYWHEEL SHROUD** for standard engine and power unit | 1 | 15 | |
| | | SE-124A with pad for mounting electric starter | | 15 | 6 |
| | | SE-124B with pad for mt'g air cleaner | | 15 | 12 |
| | | SE-124C with pads for starter and air cleaner mounting | | 16 | 2 |
| | | SE-124D with pads for air cleaner and air stack mounting | | 15 | 13 |
| | | SE-124F with pads for starter, air cleaner and air stack | | 16 | 3 |
| 229 | SE-125 | **REAR SHROUD COVER,** R.H. side | 1 | 1 | 3 |
| 230 | SE-125-A | **REAR SHROUD COVER,** L.H. side | 1 | 1 | 3 |
| 231 | SE-126 | **LOWER CYLINDER SHROUD,** R.H. side | 1 | | 14 |
| 232 | SE-126-A | **LOWER CYLINDER SHROUD,** L.H. side | 1 | | 14 |
| 233 | SE-127 | **CYLINDER HEAD SHROUD,** R.H. side | 1 | 1 | 2 |
| 234 | SE-127-A | **CYLINDER HEAD SHROUD,** L.H. side | 1 | 1 | 2 |
| 235 | SE-128-B | **CYLINDER HEAT DEFLECTOR** R.H. side. | 1 | 1 | |
| 236 | SE-128-C | **CYLINDER HEAT DEFLECTOR** L.H. side. | 1 | 1 | |
| 238 | T-89-7-S1 | **GOVERNOR ASSEMBLY** | 1 | 3 | 3 |
| | | Consisting of: | | | |
| | | 1 TC-391-B Thrust sleeve and bearing | | | |
| | | 1 TC-395-S1 Housing assembly | | | |
| | | 1 TC-405 Flyweight assembly | | | |
| 239 | TA-111-1 | **PLUNGER** for fuel pump (TA-116 must also be ordered). | 1 | | 1 |
| 240 | TA-114-S1 | **PRIMER SHAFT,** with JK-50 ring For engine with fuel pump. | 1 | | 1 |
| | TA-114-C-S1 | **PRIMER SHAFT,** with JK-50 ring For power unit with fuel pump. | 1 | | 1 |
| 241 | TA-115 | **PRIMER HANDLE** (straight) For engine with fuel pump. | 1 | | 1 |
| 241A | TA-115-4 | **PRIMER HANDLE** (bent) For power unit with fuel pump. | 1 | | 1 |
| 242 | TA-116 | **PLUNGER CAP** for fuel pump | 1 | | 1 |
| 243 | TB-105-B | **FUEL PUMP ADAPTER** Order TF-96 (for engines) or TF-96-6 (for power units), complete adapter and primer assembly. | 1 | | |
| 244 | TC-322-A-S1 | **GOVERNOR FLYWEIGHT** With TC-328 Thrust pin. | 2 | | |
| 245 | TC-328 | **FLYWEIGHT THRUST PIN** For governor flyweights. | 2 | | |
| 246 | TC-367-A | **ADJUSTING SCREW PIN** for governor | 1 | | |
| 247 | TC-388-1 | **GOVERNOR SHAFT** | 1 | | |
| 248 | TC-389-1 | **GOVERNOR GEAR BUSHING** | 1 | | |
| 249 | TC-391-B | **THRUST SLEEVE** and **BEARING** For governor. | 1 | | |
| | | TC-391 and TC-391-A, replaced by TC-391-B. | | | |
| 250 | TC-395 | **GOVERNOR HOUSING** Order TC-395-S1 Housing assembly. | 1 | | |
| 251 | TC-395-S1 | **GOVERNOR HOUSING ASSEMBLY** | 1 | 2 | |
| | | Consisting of: | | | |
| | | 1 PF-18 Plug | | | |
| | | 1 PF-118 Retainer | | | |
| | | 1 PH-318-A Seal | | | |
| | | 1 QD-615-A Gasket | | | |
| | | 1 RF-269-2 Fitting | | | |
| | | 1 SA-52 Plug | | | |
| | | 1 TC-395 Housing | | | |
| | | 1 TC-398 Shaft and lever | | | |
| | | 1 VB-151 Yoke | | | |
| | | 1 XH-1 Pin | | | |
| 252 | TC-398 | **CROSS SHAFT** and **LEVER,** for gov. | 1 | | |
| 253 | TC-405 | **GOVERNOR FLYWEIGHT ASSEMBLY** | 1 | 1 | |
| | | Consisting of: | | | |
| | | 1 GD-100-A Gear | | | |
| | | 2 PA-340 Pins | | | |
| | | 1 PH-313-A Washer | | | |
| | | 2 TC-322-A Flyweights | | | |
| | | 2 TC-328 Pins | | | |
| | | 1 TC-389-1 Bushing | | | |
| 254 | TF-96 | **FUEL PUMP ADAPTER** and **PRIMER ASSEMBLY** (with straight handle, for open engine.) Consisting of: | 1 | 1 | |
| | | 1 JK-50 Packing ring | | | |
| | | 1 PM-145 Spring | | | |
| | | 1 TA-111-1 Plunger | | | |
| | | 1 TA-114 Shaft | | | |
| | | 1 TA-115 Handle | | | |
| | | 1 TA-116 Cap | | | |
| | | 1 TB-105-B Adapter | | | |
| | TF-96-6 | **ADAPTER** and **PRIMER ASSEMBLY** (with bent handle for power units with fuel pump.) Consisting of: | 1 | 1 | |
| | | 1 JK-50 Packing ring | | | |
| | | 1 PM-145 Spring | | | |
| | | 1 TA-111-1 Plunger | | | |
| | | 1 TA-114-C Shaft | | | |
| | | 1 TA-115-4 Handle | | | |
| | | 1 TA-116 Cap | | | |
| | | 1 TB-105-B Adapter | | | |
| | | 1 XE-65 Screw | | | |
| 256 | U-226 | **STARTING CRANK** | 1 | 2 | |
| 257 | VB-151 | **GOVERNOR YOKE** | 1 | | |
| 258 | VE-471-4 | **PRIMER CONTROL** For power units with fuel pump. | 1 | | |

Order parts from nearest ***SERVICE STATION*** shown in directory following parts list.

***IMPORTANT:*** Always give Model, Specification and Serial Numbers as shown on name plate.

# MODEL VP4D PARTS LIST

| Ref. No. | Part Number | Description | No. Req | Net Wt. Lb | Net Wt. Oz |
|---|---|---|---|---|---|
| 259 | VE-549 | **GOVERNOR CONTROL ROD** to carb. | 1 | | 1 |
| 260 | VE-575-D | **CHOKE CONTROL** VE-435-4, replaced by VE-575-D. | 1 | | 4 |
| 261 | WD-47 | **MUFFLER** for 1½" pipe tap | 1 | 3 | |
| 262 | WE-243 | **GEAR COVER SPACER** | 1 | 2 | 4 |
| 265 | Y-74-1-S1 | **MAGNETO, FAIRBANKS-MORSE** No. **FMXV4B7A,** with gear Y-41-1-S1, replaced by Y-74-1-S1. | 1 | 7 | 8 |
| | Optional Y-54-S2 | **MAGNETO, WICO** No. **XH-1343** With gear. **NOTE:** These engines are equipped with either a 'Fairbanks-Morse' or 'Wico' magneto as shown above. See magneto bulletins in back of manual for service replacement parts list. | | 6 | |
| 266 | YD-6 | **SPARK PLUG,** Champion 18mm, No. 8 Com. (or equivalent) | 4 | | 2 |
| 267 | YD-12 | **RUBBER SPARK PLUG NIPPLE** | 4 | | 1 |
| 268 | YL-81 | **MAGNETO IGNITION CABLE** To No. 1 cylinder, 30-5/8" long. | 1 | | 2 |
| 269 | YL-82 | **MAGNETO IGNITION CABLE** To No. 2 cylinder, 37-5/8" long. | 1 | | 2 |
| 270 | YL-80 | **MAGNETO IGNITION CABLE** To No. 3 cylinder, 34-5/8" long. | 1 | | 2 |
| 271 | YL-142 | **MAGNETO IGNITION CABLE** To No. 4 cylinder, 40-5/8" long. | 1 | | 2 |
| | | **STANDARD HARDWARE** **NOTE:** The following pipe nipples, pins, nuts, washers, capscrews and etc. are of the common hardware variety and can be purchased from local plumbing or hardware stores. | | | |
| 276 | LJ-161 | **PIPE NIPPLE,** 1-1/2" x 2" long For mounting muffler. | 1 | | 6 |
| 277 | ME-60 | **STEEL BALL,** 1/4" dia. For oil pump relief valve. | 1 | | 1 |
| 278 | PA-64 | **PIN,** 1/8" dia. x 3/4" straight, steel For oil pump gear. | 1 | | 1 |
| 279 | PD-10 | **NUT,** 5/16"-24 thread, hexagon steel For mounting oil filter. | 2 | | 1 |
| 280 | PD-11 | **NUT,** 3/8"-24 thread, hexagon steel 1-for magneto stud (upper hole) 8-for connecting rod bolts | 9 | | 1 |
| 281 | PD-13 | **NUT,** 1/2"-20 thread, hexagon steel For mounting cyl. block to crankcase. | 12 | | 1 |
| 282 | PD-77 | **NUT,** 1/4"-20 thread, hexagon steel For governor adjusting screw pin. | 1 | | 1 |
| 283 | PD-78 | **NUT,** 5/16"-18 thread, hexagon steel For spacer to gear cover (L.H. side). | 1 | | 1 |
| 284 | PD-79 | **NUT,** 3/8"-16 thread, hexagon steel For magneto screw (lower hole). | 1 | | 1 |
| 285 | PD-104 | **NUT,** 7/16"-20 thread, hexagon brass For manifold to cylinder block. | 4 | | 1 |
| 288 | PE-3 | **LOCKWASHER,** 1/4" Positive 2-for fuel pump adapter 6-for crankcase splash plates 8-for flywheel shroud screen 32-for air shrouding | 48 | | 1 |
| 289 | PE-4 | **LOCKWASHER,** 5/16" Positive 14-for bottom cover 4-for flywheel shroud to gear cover 19-for gear cover and spacer to case 2-for mounting fuel pump 2-for mounting carburetor 2-for mounting oil filter 6-for bearing plate (flywheel end) 4-for mounting governor housing | 53 | | 1 |
| 290 | PE-5 | **LOCKWASHER,** 3/8" Positive(11/16"O.D 2-for magneto mounting 2-for flywheel shroud to gear cover (center holes) 6-for main bearing plate, take-off end | 10 | | 1 |
| 291 | PE-6 | **LOCKWASHER,** 7/16" Positive For mounting manifold to cyl. blocks. | 4 | | 1 |
| 292 | PE-7 | **LOCKWASHER,** 1/2" Positive For cylinder block to crankcase studs. | 12 | | 1 |
| 293 | PE-14 | **LOCKWASHER,** No. 10 Positive 6-for oil pump cover 1-for oil pump screen | 7 | | 1 |
| 294 | PE-37 | **LOCKWASHER,** 5/8" Positive For engine supports to crankcase. | 4 | | 1 |
| 295 | PE-46 | **LOCKWASHER,** 5/16" External Everlock, for mounting camshaft gear | 3 | | 1 |
| 296 | PF-18 | **PIPE PLUG,** 1/8" slotted, steel 5-for taps in oil header tube 1-for oil filter inlet hole (bottom of case) 1-for oil pump lockscrew 1-for oil header 1-in governor housing | 9 | | 1 |
| 297 | PF-25 | **PIPE PLUG,** 3/8" slotted, steel For timing hole in gear cover. | 1 | | 2 |
| 298 | PH-14 | **WASHER,** 5/16" I.D. x 19/32" O.D., plain copper, for valve inspection cover | 4 | | 1 |
| 299 | PH-22 | **WASHER,** 3/8" I.D. x 11/16" O.D., plain steel, for mounting cylinder heads | 34 | | 1 |
| 300 | PH-22-A | **WASHER,** 3/8" I.D. x 11/16" O.D. x 3/32" thick, plain steel For magneto mounting screw. | 1 | | 1 |
| 301 | PH-332 | **WASHER,** 1/8" I.D. x 5/16" O.D. x 1/32" thick, plain steel Between governor control rod and lever. | 1 | | 1 |
| 302 | PL-24 | **WOODRUFF KEY,** No. 29 For mounting flywheel. | 1 | | 1 |
| 303 | PL-49 | **WOODRUFF KEY,** No. 15 For crankshaft gear. | 1 | | 1 |
| 304 | PL-137 | **WOODRUFF KEY,** No. 1 For oil pump gear. | 1 | | 1 |
| 305 | RF-794 | **PIPE NIPPLE,** 1/8" x 3/4" long For mounting fuel strainer. | 1 | | 1 |

Order parts from nearest ***SERVICE STATION*** shown in directory following parts list.

***IMPORTANT:*** Always give Model, Specification and Serial Numbers as shown on name plate.

# MODEL VP4D PARTS LIST

| Ref. No. | Part Number | Description | No. Req | Net Wt. Lb | Net Wt. Oz |
|---|---|---|---|---|---|
| 306 | SA-26 | **PLUG,** 5/8" Expansion<br>For camshaft oil hole. | 2 | | 1 |
| 307 | SA-52 | **PLUG,** 1/2" Expansion<br>For governor cross shaft (in housing). | 1 | | 1 |
| 308 | SA-58 | **PLUG,** 1-3/8" Expansion<br>For camshaft end hole. | 1 | | 1 |
| 309 | XA-7 | **SCREW,** No. 10-32 thread x 3/8" long, steel round head<br>For mounting oil pump screen. | 1 | | 1 |
| 310 | XA-8 | **SCREW,** No. 10-32 thread x 1/2" long, steel, round head<br>For mounting oil pump cover. | 4 | | 1 |
| 311 | XA-33 | **SCREW,** 1/4"-20 thread x 3/8" long, steel, round head<br>8-for flywheel shroud screen<br>16-for shroud covers and lower cylinder covers<br>4-for lower covers to cylinder block<br>2-for rear covers, lower holes to cylinder block | 30 | | 1 |
| 312 | XA-34 | **SCREW,** 1/4"-20 thread x 1/2" long, steel, round head<br>For rear shroud covers — upper holes. | 2 | | 1 |
| 313 | XA-56 | **SCREW,** No. 10-32 x 1-1/4" long, steel round head<br>For mounting oil pump cover. | 2 | | 1 |
| 314 | XA-65 | **SCREW,** No. 8 x 1/2" long, self tapping, sheet metal, for mounting choke control bracket. | 2 | | 1 |
| 315 | XA-67 | **SCREW,** No. 4 x 1/4" long, self tapping, sheet metal<br>For mounting name and instruction plate. | 4 | | 1 |
| 317 | XB-75 | **SCREW,** 1/4"-20 thread x 3/4" long, Allen head capscrew<br>For mounting fuel pump adapter. | 2 | | 1 |
| 318 | XD-3 | **SCREW,** 1/4"-20 thread x 3/8" long, hexagon head<br>2-for shroud to cylinder blocks<br>4-for heat deflector to rear covers<br>2-for lower cylinder covers to shroud<br>1-for tap in cylinder block (R.H. side) | 9 | | 1 |
| 319 | XD-4 | **SCREW,** 1/4"-20 thread x 1/2" long, hexagon head<br>6-for mounting crankcase splash plates<br>2-for mounting fuel pump pad cover | 8 | | 1 |
| 320 | XD-13-1 | **SCREW,** 5/16"-18 thread x 1/2" long, 1/8" thick, hexagon head<br>For mounting flywheel shroud to gear cover. | 4 | | 1 |
| 321 | XD-14 | **SCREW,** 5/16"-18 thread x 5/8" long, hexagon head<br>14-for crankcase bottom cover.<br>2-for mounting fuel pump | 16 | | 1 |
| 322 | XD-15 | **SCREW,** 5/16"-18 thread x 3/4" long, hexagon head<br>For mounting spacer to gear cover and crankcase. | 8 | | 1 |
| 323 | XD-16 | **SCREW,** 5/16"-18 thread x 7/8" long, hexagon head<br>For mounting governor housing. | 4 | | 1 |
| 324 | XD-17 | **SCREW,** 5/16"-18 thread x 1" long, hexagon head<br>6-for bearing retainer plate (flywheel end)<br>3-for mounting camshaft gear<br>1-for spacer to gear cover | 10 | | 2 |
| 325 | XD-19 | **SCREW,** 5/16"-18 thread x 1-1/4" long, hexagon head<br>10-for mounting gear cover<br>2-for mounting carburetor | 12 | | 2 |
| 326 | XD-23 | **SCREW,** 5/16"-18 thread x 2" long, hexagon head<br>For valve inspection cover. | 4 | | 2 |
| 328 | XD-29 | **SCREW,** 3/8"-16 thread x 1-1/4" long, hexagon head<br>For main bearing plate, take-off end. | 6 | | 2 |
| 329 | XD-30 | **SCREW,** 3/8"-16 thread x 1-1/2" long, hexagon head<br>For mounting cylinder heads. | 34 | | 2 |
| 330 | XD-33 | **SCREW,** 3/8"-16 thread x 2-1/4" long, hexagon head<br>For mounting magneto. | 1 | | 2 |
| 331 | XD-52 | **SCREW,** 5/8"-11 thread x 1-3/4" long, hexagon head<br>For engine supports to crankcase. | 4 | | 2 |
| 332 | XD-114 | **SCREW,** 3/8"-16 thread x 5/8" long, hexagon head<br>For mounting flywheel shroud to gear cover. | 2 | | 1 |
| 335 | XE-55 | **SCREW,** 5/16"-18 thread x 3/8" long, Allen head set<br>For mounting idler stud. | 1 | | 1 |
| 336 | XE-65 | **SCREW,** No. 10-32 thread x 1/4" long, Allen head set<br>For fuel pump primer shaft. | 1 | | 1 |
| 337 | XH-1 | **TAPER PIN,** No. 0 x 3/4" long<br>For governor yoke. | 1 | | 1 |
| 338 | XI-16 | **COTTER PIN,** 1/8" x 1" long<br>For oil pump relief valve spring. | 1 | | 1 |
| 339 | XI-32 | **COTTER PIN,** 3/64" x 3/8" long<br>For governor control rod. | 1 | | 1 |
| 340 | XK-1 | **PIPE PLUG,** 1/8" squarehead<br>For inlet manifold. | 1 | | 1 |
| 341 | XK-4 | **PIPE PLUG,** 1/2" squarehead<br>For oil drain. | 1 | | 1 |

Order parts from nearest ***SERVICE STATION*** shown in directory following parts list.

***IMPORTANT:*** Always give Model, Specification and Serial Numbers as shown on name plate.

# REPAIR PARTS LIST

## FOR

## POWER UNIT HOUSE PARTS AND ACCESSORIES COMMONLY SUPPLIED ON ENGINES

★

**IMPORTANT**

THE FOLLOWING SECTION IS INTENDED TO BE AN AID IN SELECTING SERVICE PARTS ONLY IF THEY HAD ORIGINALLY BEEN SUPPLIED WITH THE ENGINE.

SHOULD IT BE DESIRED TO CONVERT AN ENGINE TO USE ANY ACCESSORIES, CONTACT WISCONSIN MOTOR CORPORATION OR AN AUTHORIZED DEALER OR DISTRIBUTOR BEFORE ORDERING PARTS. IN MOST CASES, A CONVERSION CAN ONLY BE MADE IF MAJOR ENGINE PARTS ARE ALSO CHANGED.

# VP4D ENGINE HOUSE WITH FUEL TANK AT TAKE-OFF END OR UNDERSLUNG FUEL TANK

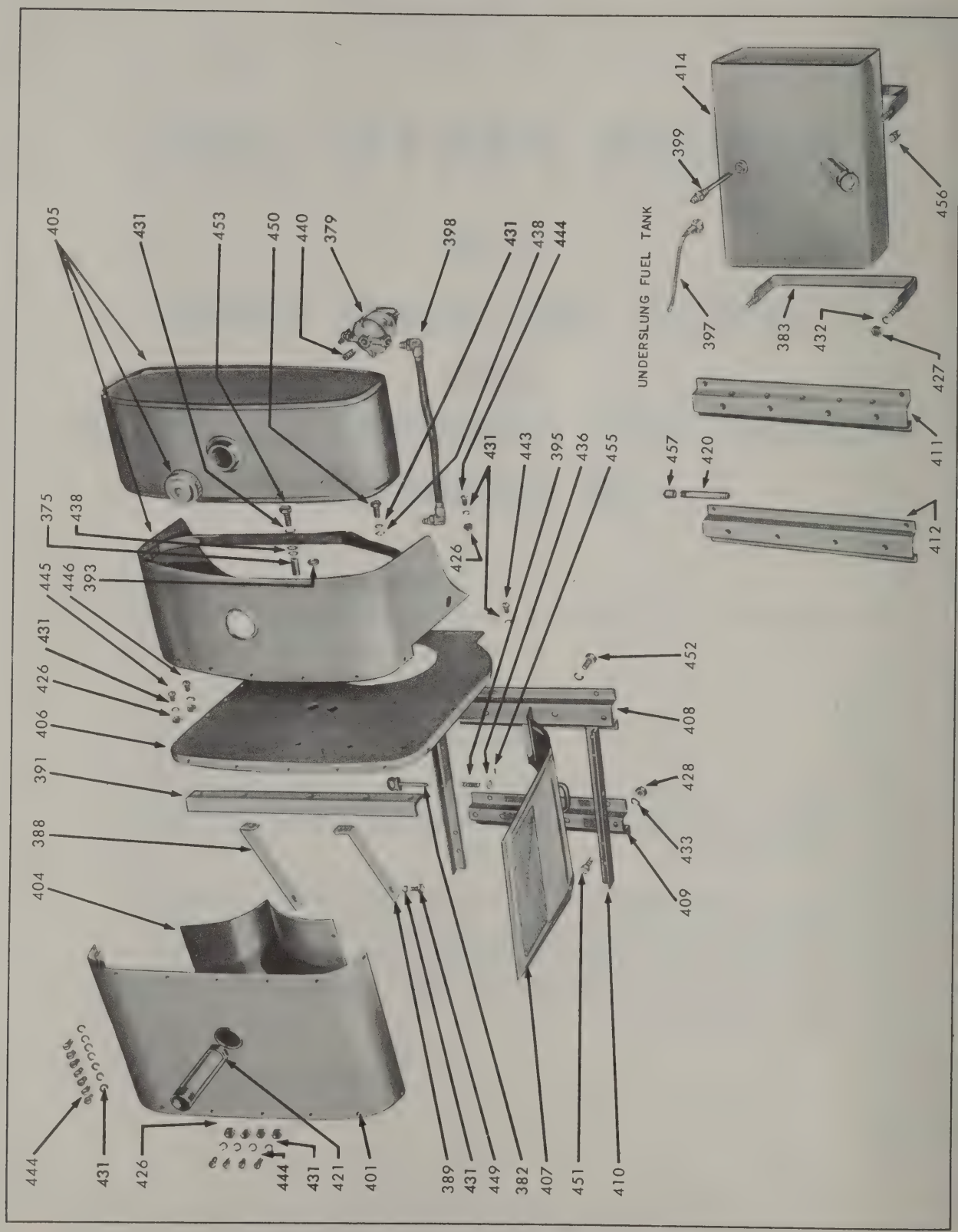


**Fig. 61, ENGINE HOUSE AND FUEL TANK GROUP**

129783C

Parts are identified by reference number. See parts list for correct part number.

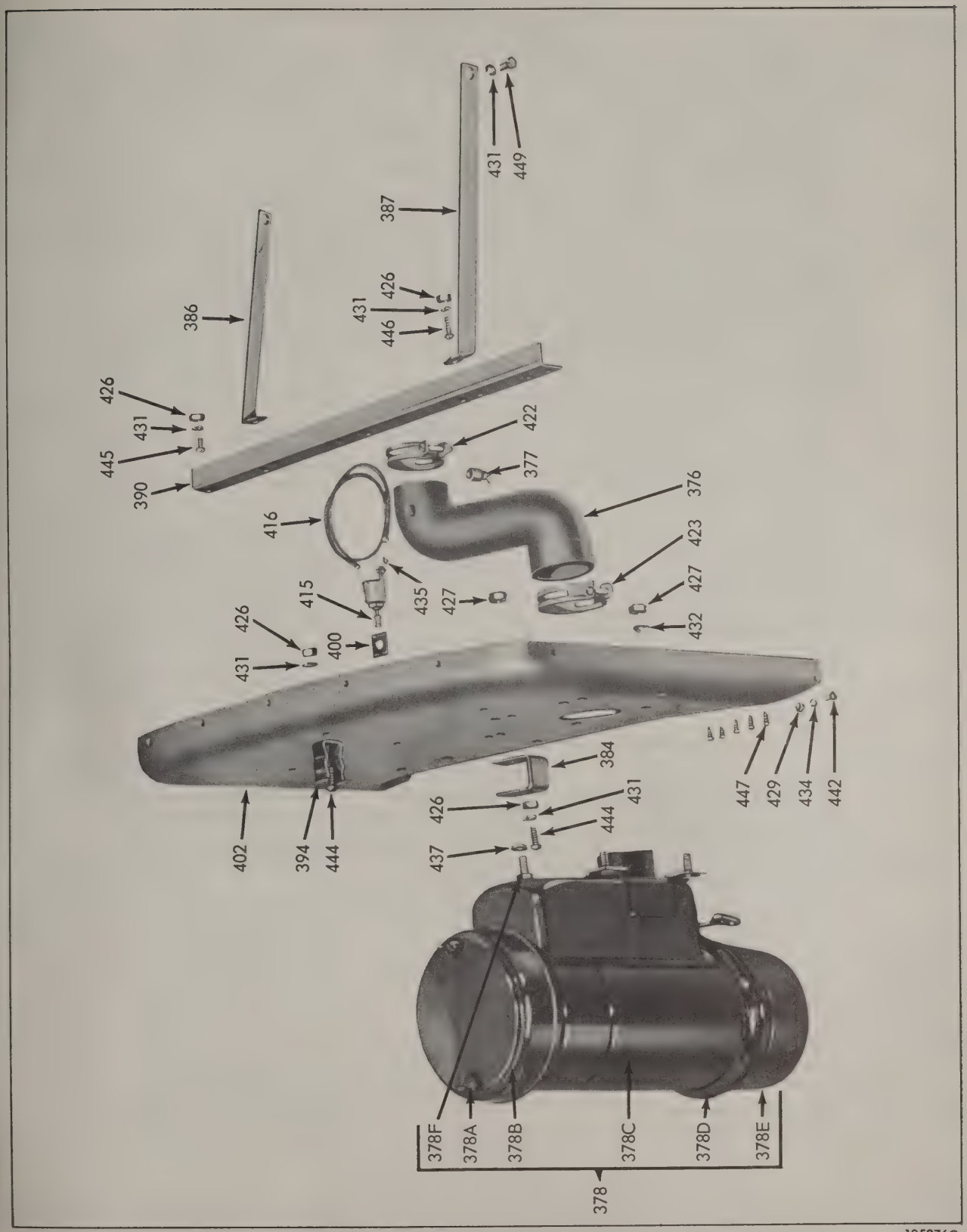


125976C

**Fig. 62, END PANEL AND AIR CLEANER FOR UNIT HOUSE**

Parts are identified by reference number. See parts list for correct part number.

# VP4D ENGINE HOUSE WITH FUEL TANK AT TAKE-OFF END OR UNDERSLUNG FUEL TANK

| Ref. No. | Part Number | Description | No. Req | Net Wt. Lb | Net Wt. Oz |
|---|---|---|---|---|---|
| 375 | HF-397 | **SPACER** between rear panel and cylinder block | 1 | | 1 |
| 376 | LL-88-A-S1 | **RUBBER ELBOW ASSEMBLY** for air cleaner connection. Consisting of:<br>1 LL-88-A Elbow<br>1 LO-88 Drip plug<br>LL-88-S1, replaced by LL-88-A-S1. | 1 | | 12 |
| 377 | LO-88 | **DRIP PLUG ASSEMBLY** for carburetor | 1 | | 1 |
| 378 | LO-89 | **AIR CLEANER,** Donaldson No. A-5521<br>Service Parts: Donaldson part numbers. | 1 | 7 | 8 |
| 378A | | P-2274 Wing nut | 2 | | 1 |
| 378B | | P-8730 Hood assembly | 1 | | 6 |
| 378C | | P-8725 Body assembly — not serviced — order complete air cleaner | 1 | | |
| 378D | | P-2706 Oil cup retaining clamp assembly | 1 | | 3 |
| 378E | | P-8733 Oil cup assembly | 1 | | 8 |
| 378F | | P-6921 Jam nut | 1 | | 1 |
| | | LO-77-A Donaldson No. A-614, replaced by LO-89. | | | |
| 379 | LP-19 | **FUEL STRAINER,** Tillotson No. OW-418<br>**NOTE:** See illustration in rear of manual for service parts list of fuel strainer. | 1 | | 12 |
| 382 | PG-323 | **DOOR CLIP** | 2 | | 3 |
| 383 | PG-454 | **TANK STRAP** for underslung fuel tank | 2 | 1 | 4 |
| 384 | PG-491 | **BRACKET** for starting crank | 1 | | 2 |
| 386 | PG-521 | **BRACE** to front panel, magneto side<br>(For engines beginning with Serial No. 1089248).<br>PG-463 (To and including Serial 1089247) | 1 | | 5 |
| 387 | PG-522 | **BRACE** to front panel, R.H. side<br>(For engines beginning with Serial No. 1089248).<br>PG-462 (To and including Serial 1089247) | 1 | | 6 |
| 388 | PG-523 | **BRACE** to rear panel, L.H. side<br>(For engines beginning with Serial No. 1089248).<br>PG-436 (To and including Serial 1089247) | 1 | | 5 |
| 389 | PG-524 | **BRACE** to rear panel, R.H. side<br>(For engines beginning with Serial No. 1089248).<br>PG-435 (To and including Serial 1089247) | 1 | | 3 |
| 390 | PG-525 | **ANGLE** for reinforcing front panel | 1 | 1 | 6 |
| 391 | PG-526 | **ANGLE** for reinforcing rear panel | 1 | 1 | 7 |
| 393 | PH-198 | **GROMMET** in rear panel for fuel line | 1 | | 1 |
| 394 | PK-87 | **CLIP** for crank mounting | 1 | | 1 |
| 395 | PM-137 | **SPRING** for door clip | 2 | | 1 |
| 397 | RM-450 | **FUEL LINE** tubing with nuts, 20-3/4" long, underslung fuel tank to pump | 1 | | 6 |
| 398 | RM-1202-A | **FUEL LINE,** 16-1/4" long, tank to carburetor | 1 | | 5 |
| 399 | RM-1209 | **SUCTION TUBE ASSEMBLY**<br>For underslung fuel tank.<br>RM-1206-C, replaced by RM-1209. | 1 | | 3 |
| 400 | SD-108 | **TAG** for ignition switch | 1 | | 1 |
| 401 | WE-247-A | **CANOPY** | 1 | 6 | |
| 402 | WE-248 | **FRONT PANEL** (standard)<br>WE-248-3 Panel (with additional holes for switch and ammeter) for units with electrical equipment. | 1 | 6 | 4 |
| 404 | WE-249-A | **HEAT DEFLECTOR** | 1 | 1 | 4 |
| 405 | WE-250 | **FUEL TANK ASSEMBLY** take-off end<br>Consisting of:<br>Supports and straps (not furnished separately) | 1 | 23 | |
| | | RC-77 Gas tank cap | 1 | | 3 |
| | | WE-250-1 Tank with cap | 1 | 10 | |
| 406 | WE-251-A | **REAR PANEL** for unit with tank at take-off end | 1 | 11 | 8 |
| | WE-251A-2 | **Rear Panel** (with hole to clear fuel pump)<br>For units with underslung fuel tank. | | | |
| 407 | WE-252 | **DOOR**<br>WE-252-B Door, L.H. side (bumped out to clear 1/2 speed distributor).<br>WE-252-1 Door (bumped out to clear engine-speed distributor). | 2 | 6 | |
| 408 | WE-253 | **ENGINE SUPPORT** T.O. end—for units with fuel tank at take-off end | 1 | 4 | 5 |
| 409 | WE-254 | **ENGINE SUPPORT** flywheel end — for units with fuel tank at take-off end | 1 | 3 | 12 |
| 410 | WE-255 | **SIDE RAIL** | 2 | 1 | 4 |
| 411 | WE-275 | **ENGINE SUPPORT** T.O. end — for units with underslung fuel tank | 1 | 5 | 8 |
| 412 | WE-276 | **ENGINE SUPPORT** flywheel end — for units with underslung fuel tank | 1 | 5 | |
| 414 | WE-277-S1 | **UNDERSLUNG FUEL TANK**<br>With RC-87 cap and RM-1209 suction tube. | 1 | 11 | |
| 415 | YC-9-C | **IGNITION SWITCH**<br>YC-9-A, replaced by YC-9-C. | 1 | | 2 |
| 416 | YL-134 | **MAGNETO GROUND WIRE** | 1 | | 2 |
| | | **STANDARD HARDWARE** | | | |
| 420 | LJ-295 | **PIPE NIPPLE,** 1/2" x 4" long<br>For oil drain on units with underslung tank. | 1 | | 3 |

Order parts from nearest ***SERVICE STATION*** shown in directory following parts list.

***IMPORTANT:*** Always give Model, Specification and Serial Numbers as shown on name plate.

# VP4D ENGINE HOUSE WITH FUEL TANK AT TAKE-OFF END OR UNDERSLUNG FUEL TANK

| Ref. No. | Part Number | Description | No. Req | Net Wt. Lb | Net Wt. Oz |
|---|---|---|---|---|---|
| 421 | LJ-337 | **PIPE NIPPLE,** 1-1/2" x 9-1/4" long .... For mounting exhaust muffler. | 1 | 2 | |
| 422 | LK-8 | **HOSE CLAMP,** 2-1/8" I.D. ..... For air cleaner connection, carburetor end. | 1 | | 1 |
| 423 | LK-9 | **HOSE CLAMP,** 2-3/8" I.D. ..... For air cleaner connection, cleaner end | 1 | | 1 |
| 426 | PD-77 | **NUT,** 1/4"-20 thread, hexagon steel ..... 10-for braces to rear and front panels. 7-for fuel tank support to rear panel. 4-for heat deflector to canopy. 3-for mounting crank support and clip. | 24 | | 1 |
| 427 | PD-78 | **NUT,** 5/16"-18 thread, hexagon steel .... 5-for mounting air cleaner. 4-for underslung tank to engine supports. | 9 | | 1 |
| 428 | PD-79 | **NUT,** 3/8"-16 thread, hexagon steel ..... For side rails to engine supports. | 4 | | 1 |
| 429 | PD-115 | **NUT,** No. 10-32 thread, hexagon steel .. For front panel to side of flywheel shroud. | 2 | | 1 |
| 431 | PE-3 | **LOCKWASHER,** 1/4" Positive ..... 14-for canopy. 12-for mounting braces from manifolds to panels. 8-for tank support to rear panel. 7-for mounting rear panel. 4-for heat deflector to canopy. 3-for mounting crank support and clip. | 48 | | 1 |
| 432 | PE-4 | **LOCKWASHER,** 5/16" Positive ..... 5-for mounting air cleaner. 4-for mounting underslung tank to engine supports. | 9 | | 1 |
| 433 | PE-5 | **LOCKWASHER,** 3/8" Positive ..... For side rails to engine supports. | 4 | | 1 |
| 434 | PE-45 | **LOCKWASHER,** No. 10 External 'Everlock' ..... For front panel to side of flywheel shroud. | 2 | | 1 |
| 435 | PE-72 | **LOCKWASHER,** ignition switch terminal | 1 | | 1 |
| 436 | PH-2 | **PLAIN WASHER,** 7/16" I.D. x 1/16" thick, steel..... For door clip. | 2 | | 1 |
| 437 | PH-77-A | **PLAIN WASHER,** 5/16" I.D. x 1/16" thick, steel..... For air cleaner support screw. | 1 | | 1 |
| 438 | PH-196 | **PLAIN WASHER,** 1/4" I.D. x 1/16" thick, steel..... For rear panel to cylinder block mt'g. | 3 | | 1 |
| 440 | RF-794 | **NIPPLE,** 1/8" x 3/4" long, close pipe .. For fuel strainer mounting. | 1 | | 1 |
| 442 | XA-8 | **SCREW,** No. 10-32 thread x 1/2" long, round head ..... For front panel to side of flywheel shroud. | 2 | | 1 |
| 443 | XA-33 | **SCREW,** 1/4"-20 thread x 3/8" long, round head ..... For rear panel to engine support. | 5 | | 1 |
| 444 | XA-34 | **SCREW,** 1/4"-20 thread x 1/2" long, round head ..... 14-for mounting canopy. 8-for fuel tank support to rear panel. 4-for heat deflector to canopy. 3-for mounting crank support and clip. | 29 | | 1 |
| 445 | XA-35 | **SCREW,** 1/4"-20 thread x 5/8" long, round head ..... For mounting reinforcing angles. | 6 | | 1 |
| 446 | XA-36 | **SCREW,** 1/4"-20 thread x 3/4" long, round head ..... For mounting panel braces. | 4 | | 1 |
| 447 | XA-65 | **SCREW,** No. 8 x 1/2" long, self tapping, sheet metal ..... For front panel to flywheel shroud. | 5 | | 1 |
| 449 | XD-5 | **SCREW,** 1/4"-20 thread x 5/8" long, hexagon head ..... For house braces to manifold. | 2 | | 1 |
| 450 | XD-7 | **SCREW,** 1/4"-20 thread x 1" long, hexagon head ..... For rear panel to cylinder block, R.H. side. | 1 | | 1 |
| 451 | XD-25 | **SCREW,** 3/8"-16 thread x 3/4" long, hexagon head ..... For side rails to engine supports. | 4 | | 1 |
| 452 | XD-51 | **SCREW,** 5/8"-11 thread x 1-1/4" long, hexagon head ..... For mounting engine supports to case. | 4 | | 2 |
| 453 | XD-145 | **SCREW,** 1/4"-20 thread x 3-1/2" long, hexagon head ..... For rear panel to cylinder block, L.H. side. XD-120, replaced by XD-145. | 1 | | 1 |
| 455 | XI-23 | **COTTER PIN,** 1/8" x 3/4" long..... For door clips. | 2 | | 1 |
| 456 | XK-1 | **PLUG,** 1/8" square head pipe ..... For fuel tank drain. | 1 | | 1 |
| 457 | XK-117 | **COUPLING,** 1/2" W.I. pipe ..... For oil drain pipe. | 1 | | 1 |

Order parts from nearest ***SERVICE STATION*** shown in directory following parts list.

***IMPORTANT:*** Always give Model, Specification and Serial Numbers as shown on name plate.

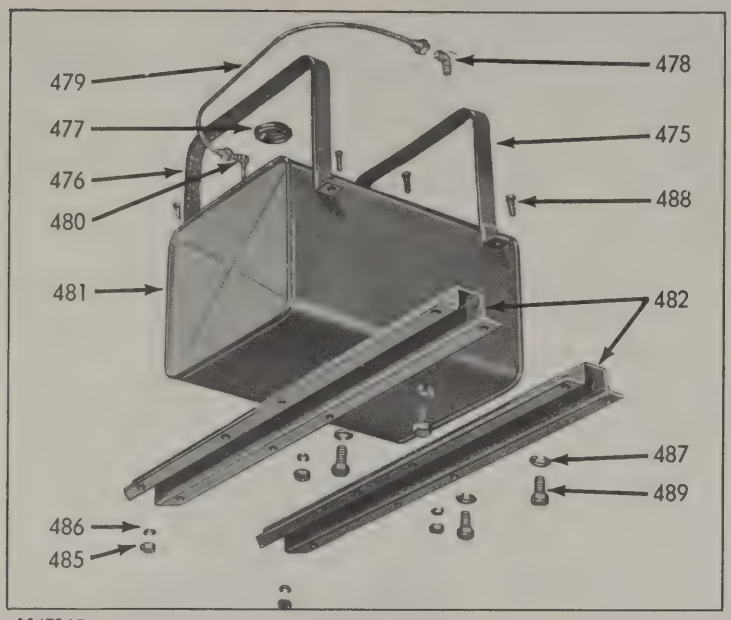


104724C

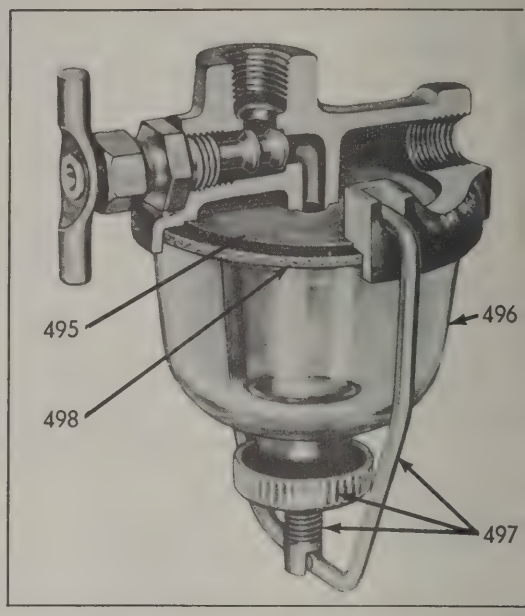


74918

Fig. 63

| Ref. No. | Part Number | Description | No. Req | Net Wt. Lb | Net Wt. Oz |
|---|---|---|---|---|---|
| 475 | PG-455 | **STRAP** for fuel tank | 2 | 1 | 8 |
| 476 | PH-244-A | **FELT** for fuel tank strap | 2 | | 1 |
| 477 | RC-77 | **CAP** for fuel tank | 1 | | 3 |
| 478 | RF-270 | **ELBOW** for fuel line, in pump | 1 | | 1 |
| 479 | RM-822 | **FUEL LINE** from tank to pump (27-1/4" long) | 1 | | 4 |
| | | **RM-524** for engines with electric starter (31-3/4" long) | 1 | | 5 |
| 480 | RM-1206-A | **SUCTION TUBE ASSEMBLY** for fuel tank | 1 | | 3 |
| 481 | WE-278-S1 | **FUEL TANK,** 9 gal. capacity With RC-77 cap and RM-1206-A suction tube. | 1 | 11 | |
| 482 | WE-279 | **ENGINE SUPPORT** | 2 | 7 | |
| | | **WE-281** for engines with electric starter | | 8 | 8 |
| | | **STANDARD HARDWARE** | | | |
| 485 | PD-79 | **NUT,** 3/8"-16 thread, hexagon steel For fuel tank straps to supports. | 4 | | 1 |
| 486 | PE-5 | **LOCKWASHER,** 3/8" Positive For fuel tank straps to supports. | 4 | | 1 |
| 487 | PE-37 | **LOCKWASHER,** 5/8" Positive For engine supports to crankcase. | 4 | | 1 |
| 488 | XD-27 | **SCREW,** 3/8"-16 thread x 1" long, hexagon head For fuel tank straps to supports. | 4 | | 1 |
| 489 | XD-51 | **SCREW,** 5/8"-11 thread x 1-1/4" long, hexagon head For engine supports to crankcase. | 4 | | 2 |

| Ref. No. | Part Number | Description | No. Req | Net Wt. Lb | Net Wt. Oz |
|---|---|---|---|---|---|
| | LP-19 | **FUEL STRAINER ASSEMBLY** (With Shut-off valve in cover, and glass bowl) Tillotson No. OW-418-T. | 1 | | |
| | LP-19-A | **FUEL STRAINER ASSEMBLY** (With Shut-off valve in cover, and metal bowl) Tillotson No. OW-449-T. | 1 | | |
| | LP-19-B | **FUEL STRAINER ASSEMBLY** (Without Shut-off valve in cover, and glass bowl) Tillotson No. OW-444. | 1 | | |
| | LP-19-C | **FUEL STRAINER ASSEMBLY** (Without Shut-off valve in cover, and metal bowl) Tillotson No. OW-476-T. | 1 | | |
| | | **The following serviceable parts are interchangeable for all the above fuel strainers.** | | | |
| 495 | OW-352 | **FILTER SCREEN** | 1 | | |
| 496 | OW-363 | **GLASS BOWL** | 1 | | |
| | 06137 | **METAL BOWL** | 1 | | |
| 497 | OW-447 | **CLAMP WIRE** and **THUMB NUT ASSEMBLY** | 1 | | |
| 498 | 06096 | **BOWL GASKET** (Wisconsin No. QD-653) | 1 | | |

Order parts from nearest ***SERVICE STATION*** shown in directory following parts list.

***IMPORTANT:*** Always give Model, Specification and Serial Numbers as shown on name plate.

# SIDE MOUNT AIR CLEANER
# FOR MODEL VP4D ENGINE

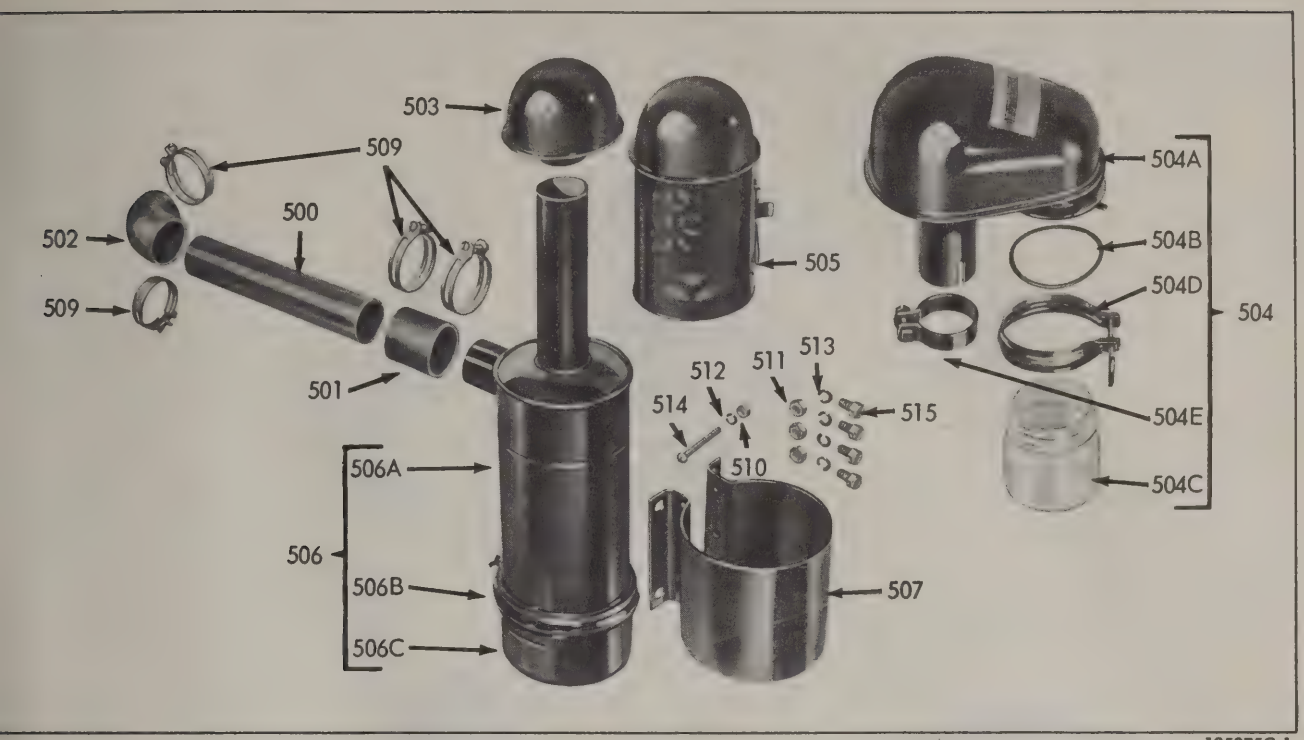


Fig. 64

125975C-1

| Ref. No. | Part Number | Description | No. Req | Net Wt. Lb | Net Wt. Oz |
|---|---|---|---|---|---|
| 500 | LJ-131 | **TUBE** for air cleaner to carburetor elbow | 1 | 1 | 6 |
| 501 | LL-18 | **RUBBER HOSE** for air cleaner tube..... | 1 | | 2 |
| 502 | LL-89 | **RUBBER ELBOW** for air cleaner tube.... | 1 | | 6 |
| 503 | LO-62 | **AIR STACK CAP,** Donaldson Co. No. 2X-1674-1 ..... | 1 | 1 | |
| 504 | LO-65-B | **COLLECTER PRE-CLEANER** ..... Donaldson Co. No. H-106A. | 1 | 3 | |
| | | Service Parts: Donaldson Part Numbers. | | | |
| 504A | | R-9583 Body assembly—not serviced — Order complete pre-cleaner. | 1 | | |
| 504B | | P-3995 Gasket..... | 1 | | 1 |
| 504C | | P-2776 Dust jar..... | 1 | | 6 |
| 504D | | P-3977 Jar clamp assembly..... | 1 | | 2 |
| 504E | | P-4543 Tube clamp assembly ..... | 1 | | 2 |
| 505 | LO-82-A | **PRE-SCREENER,** Donaldson Co. H-149.. | 1 | 1 | 4 |
| 506 | LO-90 | **AIR CLEANER,** Donaldson Co. A-552.... | 1 | 5 | |
| | | Service Parts: Donaldson Part Numbers. | | | |
| 506A | | P-8720 Body assembly—not serviced — Order complete air cleaner. | | | |
| 506B | | P-2706 Oil cup clamp assembly ..... | 1 | | 3 |
| 506C | | P-8723 Oil cup assembly..... | 1 | | 8 |
| | | LO-78 Donaldson No. A-613, replaced by LO-90 but PG-512 strap must also be ordered. | | | |

| Ref. No. | Part Number | Description | No. Req | Net Wt. Lb | Net Wt. Oz |
|---|---|---|---|---|---|
| 507 | PG-512 | **STRAP** for mounting LO-90 air cleaner.. PG-456, for LO-78 air cleaner. | 1 | 2 | |
| | | **STANDARD HARDWARE** | | | |
| 509 | LK-9 | **HOSE CLAMP,** 2-3/8" I.D. ..... For air cleaner connections. | 4 | | 1 |
| 510 | PD-77 | **NUT,** 1/4"-20 thread, hexagon steel ..... For air cleaner strap clamping screws. | 3 | | 1 |
| 511 | PD-78 | **NUT,** 5/16"-18 thread, hexagon steel .... For air cleaner strap mounting. | 3 | | 1 |
| 512 | PE-3 | **LOCKWASHER,** 1/4" Positive ..... For air cleaner strap clamping screws. | 3 | | 1 |
| 513 | PE-4 | **LOCKWASHER,** 5/16" Positive ..... For air cleaner strap mounting. | 4 | | 1 |
| 514 | XA-85 | **SCREW,** 1/4"-20 thread x 2-1/2" long, round head ..... For air cleaner strap clamping. XA-74, replaced by XA-85. | 3 | | 1 |
| 515 | XD-14 | **SCREW,** 5/16"-18 thread x 5/8" long, hexagon head..... For air cleaner strap mounting. | 4 | | 1 |

Order parts from nearest ***SERVICE STATION*** shown in directory following parts list.
***IMPORTANT:*** Always give Model, Specification and Serial Numbers as shown on name plate.

# UPRIGHT AIR INTAKE, DRUM SCREEN AND AGRICULTURAL SHROUDING FOR MODEL VP4D ENGINE

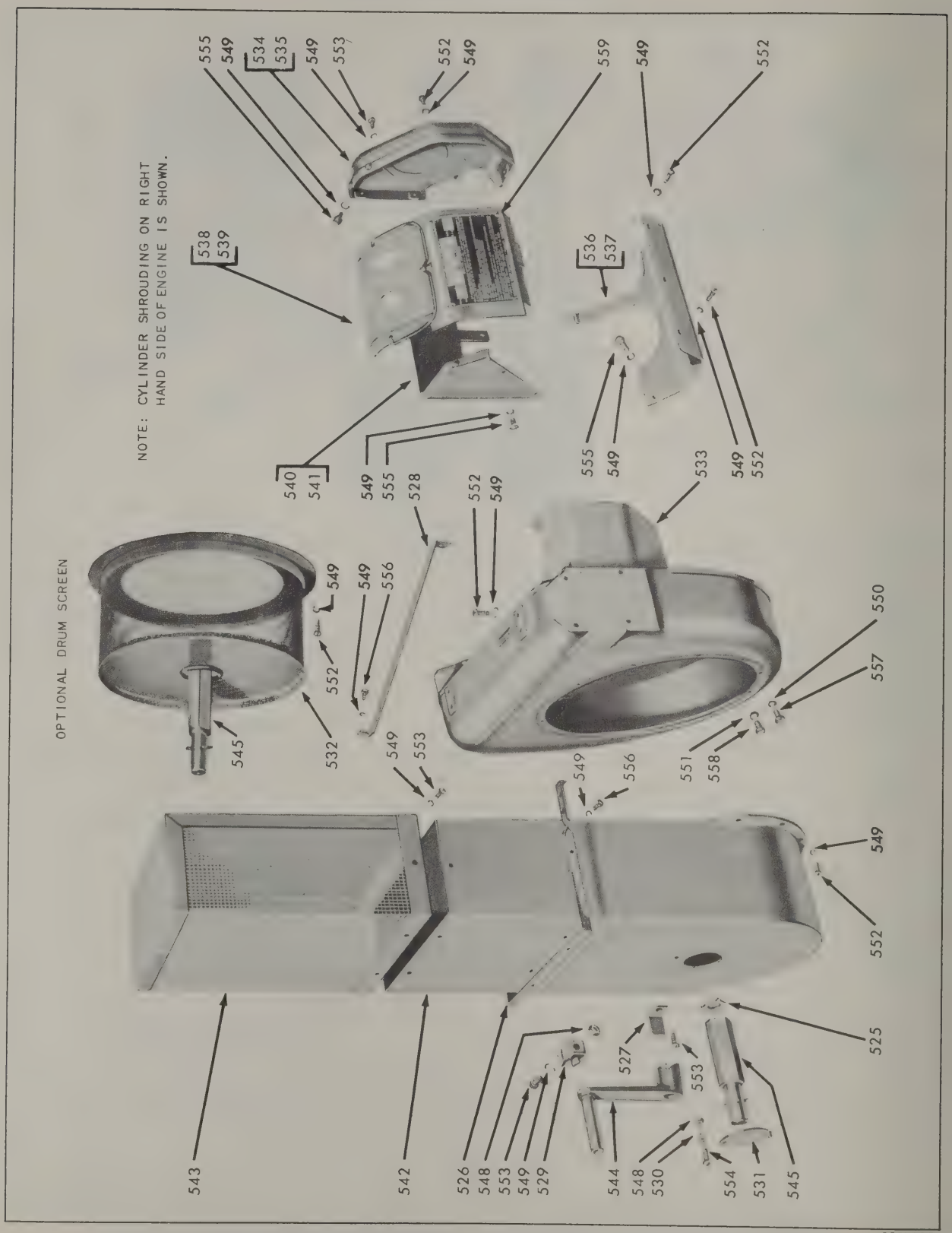


129789C

Parts are identified by reference number. See parts list for correct part number.

# UPRIGHT AIR INTAKE, DRUM SCREEN AND AGRICULTURAL SHROUDING FOR VP4D ENGINE

| Ref. No. | Part Number | Description | No. Req | Net Wt. Lb | Net Wt. Oz |
|---|---|---|---|---|---|
| 525 | PE-65-1 | **LOCKWASHER** for starting crank | 1 | | 1 |
| 526 | PG-472 | **SUPPORT STRAP** for air intake stack | 1 | 1 | 8 |
| 527 | PG-481 | **BRACKET** for crank support | 1 | | 3 |
| 528 | PG-527 | **BRACE** for air intake stack | 1 | | 6 |
| 529 | PK-87 | **SPRING CLIP** for crank support | 1 | | 1 |
| 530 | PM-4 | **SPRING** for crank hole cover | 1 | | 1 |
| 531 | SA-56 | **COVER** for crank hole in air stack | 1 | | 2 |
| 532 | SE-48-B | **DRUM TYPE INTAKE SCREEN** | 1 | 8 | |
| 533 | SE-124-D | **FLYWHEEL SHROUD** with pads for mounting upright air intake support and air cleaner mounting | 1 | 15 | 13 |
| | | **SE-124-F** with pads for intake support, air cleaner and electric starter mounting | 1 | 16 | 3 |
| 534 | SE-125-1 | **REAR SHROUD COVER ASSEMBLY** – right hand side | 1 | 1 | 8 |
| 535 | SE-125A-1 | **REAR SHROUD COVER ASSEMBLY** – left hand side | 1 | 1 | 8 |
| | | The above assemblies both consist of: | | | |
| | | PM-128 Spring for cleanout cover | 1 | | 1 |
| | | SA-76 Cleanout cover | 1 | | 4 |
| | | Rear shroud cover (not furnished separately) | 1 | | |
| | | VE-481 Spring clip pin | 1 | | 1 |
| | | XJ-49 Rivet for cleanout cover | 1 | | 1 |
| 536 | SE-126 | **LOWER CYLINDER SHROUD** right hand side. | 1 | | 14 |
| 537 | SE-126-A | **LOWER CYLINDER SHROUD** left hand side. | 1 | | 14 |
| 538 | SE-127-1 | **COVER ASSEMBLY,** right hand side | 1 | 1 | 4 |
| 539 | SE-127-A-1 | **COVER ASSEMBLY,** left hand side | 1 | 1 | 4 |
| | | The above assemblies both consist of: | | | |
| | | PG-388 Clip for spring | 1 | | 1 |
| | | PK-94 Spring | 1 | | 1 |
| | | SD-117 Instruction decal | 1 | | 1 |
| | | Cover (not furnished separately) | 1 | | |
| | | XJ-46 Rivets for clip mounting | 2 | | 1 |
| 540 | SE-128-B-1 | **CYLINDER HEAT DEFLECTOR ASSEMBLY** – right hand side | 1 | 1 | |
| | | Consisting of: | | | |
| | | SE-128-B Deflector | 1 | | 15 |
| | | VE-481 Spring clip pin | 1 | | 1 |
| 541 | SE-128-C-1 | **CYLINDER HEAT DEFLECTOR ASSEMBLY** – left hand side | 1 | 1 | |
| | | Consisting of: | | | |
| | | SE-128-C Deflector | 1 | | 15 |
| | | VE-481 Spring clip pin | 1 | | 1 |
| 542 | SE-[illegible] | **AIR INTAKE STACK** | 1 | 25 | |
| 543 | SE-140 | **SCREEN** for air intake stack | 1 | 9 | 8 |
| 544 | U-226-A | **STARTING CRANK** for engines with intake stack | 1 | 2 | 8 |
| | | Use standard U-226 Crank for engines with drum screen. | | | |
| 545 | UC-88-E-S1 | **STARTING CRANK NUT ASSEMBLY** | 1 | 4 | |
| | | Consisting of: | | | |
| | | PA-334 Pin | 1 | | 1 |
| | | UC-88-E Nut | 1 | 3 | 15 |

| Ref. No. | Part Number | Description | No. Req | Net Wt. Lb | Net Wt. Oz |
|---|---|---|---|---|---|
| | | **STANDARD HARDWARE** | | | |
| 548 | PD-77 | **NUT,** 1/4"-20 thread, hexagon steel | 2 | | 1 |
| | | 1-for crank support spring clip. | | | |
| | | 1-for crank hole cover. | | | |
| 549 | PE-3 | **LOCKWASHER,** 1/4" Positive | 52 | | 1 |
| | | 6-for air stack screen. | | | |
| | | 36-for shrouding, stack and drum screen | | | |
| | | 8-for stack support strap. | | | |
| | | 1-for crank support spring clip. | | | |
| | | 1-for air intake stack brace. | | | |
| 550 | PE-4 | **LOCKWASHER,** 5/16" Positive | 4 | | 1 |
| | | For flywheel shroud to gear cover. | | | |
| 551 | PE-5 | **LOCKWASHER,** 3/8" Positive | 2 | | 1 |
| | | For shroud to gear cover (center holes) | | | |
| 552 | XA-33 | **SCREW,** 1/4"-20 thread x 3/8" long, round head | 34 | | 1 |
| | | 8-for mounting drum screen. | | | |
| | | 4-for air intake stack. | | | |
| | | 4-for stack support strap. | | | |
| | | 12-for shroud covers and lower cylinder covers. | | | |
| | | 4-for lower covers to cylinder blocks. | | | |
| | | 2-for rear covers — lower holes. | | | |
| 553 | XA-34 | **SCREW,** 1/4"-20 thread x 1/2" long, round head | 10 | | 1 |
| | | 2-for rear shroud covers — upper holes. | | | |
| | | 2-for crank bracket and spring clip. | | | |
| | | 6-for air stack screen. | | | |
| 554 | XA-35 | **SCREW,** 1/4"-20 thread x 5/8" long, round head | 1 | | 1 |
| | | For crank hole cover. | | | |
| 555 | XD-3 | **SCREW,** 1/4"-20 thread x 3/8" long, hexagon head | 8 | | 1 |
| | | 2-for shroud to cylinder blocks. | | | |
| | | 4-for heat deflector to rear covers. | | | |
| | | 2-for lower cylinder covers to shroud. | | | |
| 556 | XD-4 | **SCREW,** 1/4"-20 thread x 1/2" long, hexagon head | 5 | | 1 |
| | | 4-for intake support strap. | | | |
| | | 1-for intake strap brace. | | | |
| 557 | XD-13-1 | **SCREW,** 5/16"-18 thread x 1/2" long, 1/8" thick, hexagon head | 4 | | 1 |
| | | For mounting flywheel shroud to gear cover. | | | |
| 558 | XD-114 | **SCREW,** 3/8"-16 thread x 5/8" long, hexagon head | 2 | | 1 |
| | | For flywheel shroud to gear cover. | | | |
| 559 | XJ-46-A | **RIVET,** 9/64" dia. x 3/16" long, tubular steel | 4 | | 1 |
| | | For mounting name and instruction plate. | | | |

Order parts from nearest ***SERVICE STATION*** shown in directory following parts list.

***IMPORTANT:*** Always give Model, Specification and Serial Numbers as shown on name plate.

# TT-61-C AND TT-61C-1 VARIABLE SPEED GOVERNOR CONTROL ASSEMBLIES

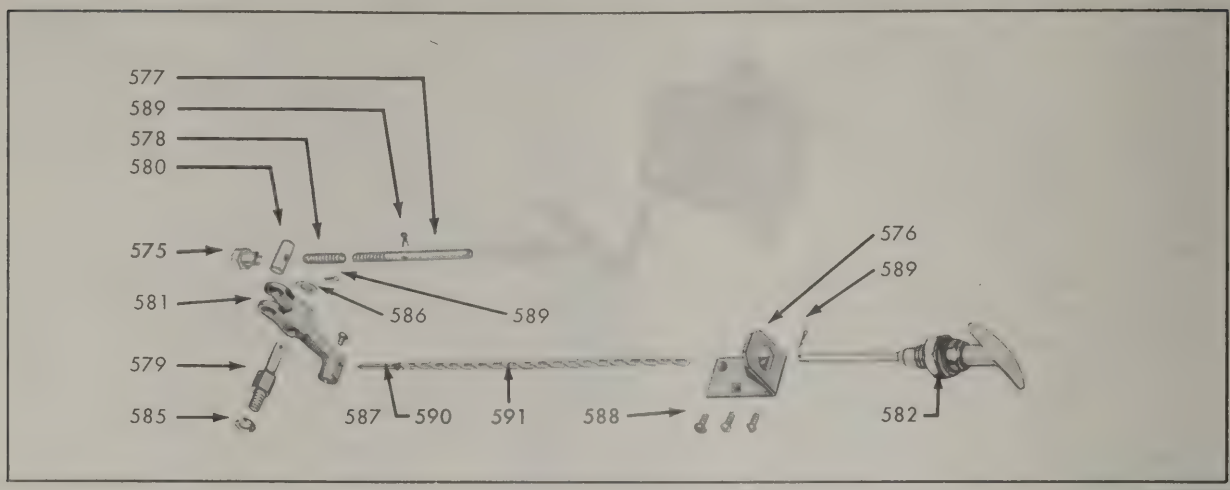


129791C

| REF. NO. | PART NUMBER | DESCRIPTION | NO. REQ. | NET WEIGHT LBS | NET WEIGHT OZ |
|---|---|---|---|---|---|
| | TT-61-C | **GOVERNOR CONTROL ASSEMBLY** – for open engine | 1 | 1 | 2 |
| | TT-61C-1 | **GOVERNOR CONTROL ASSEMBLY** – for power unit | 1 | 1 | |
| | | NOTE: The following parts are identical on both of the above assemblies except PG-319A-1 bracket is not furnished in TT-61C-1 assembly. | | | |
| 575 | PD-173-A | **LOCKNUT** for adjusting screw | 1 | | 1 |
| 576 | PG-319A-1 | **BRACKET** for governor control | 1 | | 2 |
| 577 | PI-145-1 | **ADJUSTING SCREW** | 1 | | 2 |
| 578 | PM-111 | **SPRING** for adjusting screw | 1 | | 1 |
| 579 | TC-365-D | **PIN** for lever support | 1 | | 1 |
| 580 | TC-368-A | **PIN** for adjusting screw swivel | 1 | | 1 |
| 581 | VB-134-A | **LEVER** | 1 | | 4 |
| 582 | VE-527-W | **GOVERNOR CONTROL** VE-527, replaced by VE-527-W. | 1 | | 6 |
| | | **STANDARD HARDWARE** | | | |
| 585 | PE-3 | **LOCKWASHER**, 1/4" Positive For support pin. | 1 | | 1 |
| 586 | PH-77 | **PLAIN WASHER**, 5/16" I.D. x 5/8" O.D. x 1/16" thick, steel For lever. | 1 | | 1 |
| 587 | XA-62 | **SCREW**, No. 8-32 thread x 1/4" long, round head For cotter pin in lever. | 1 | | 1 |
| 588 | XA-65 | **SCREW**, No. 8 x 1/2" long, self-tapping sheet metal For control bracket. | 3 | | 1 |
| 589 | XI-1 | **COTTER PIN**, 1/16" x 1/2" long 1-for lever pin. 1-for adjusting screw spring. 1-for chain at control. | 3 | | 1 |
| 590 | XI-11 | **COTTER PIN**, 3/32" x 1-1/4" long For chain at lever. | 1 | | 1 |
| 591 | | **No. 9100G GALVANIZED FURNACE CHAIN**, 12' long For control to lever. | 1 pc | | 1 |

Order parts from nearest ***SERVICE STATION*** shown in directory following parts list.
***IMPORTANT:*** Always give Model, Specification and Serial Numbers as shown on name plate.

# TT-61-D IDLE CONTROL ASSEMBLY
# FOR MODEL VP4D ENGINE

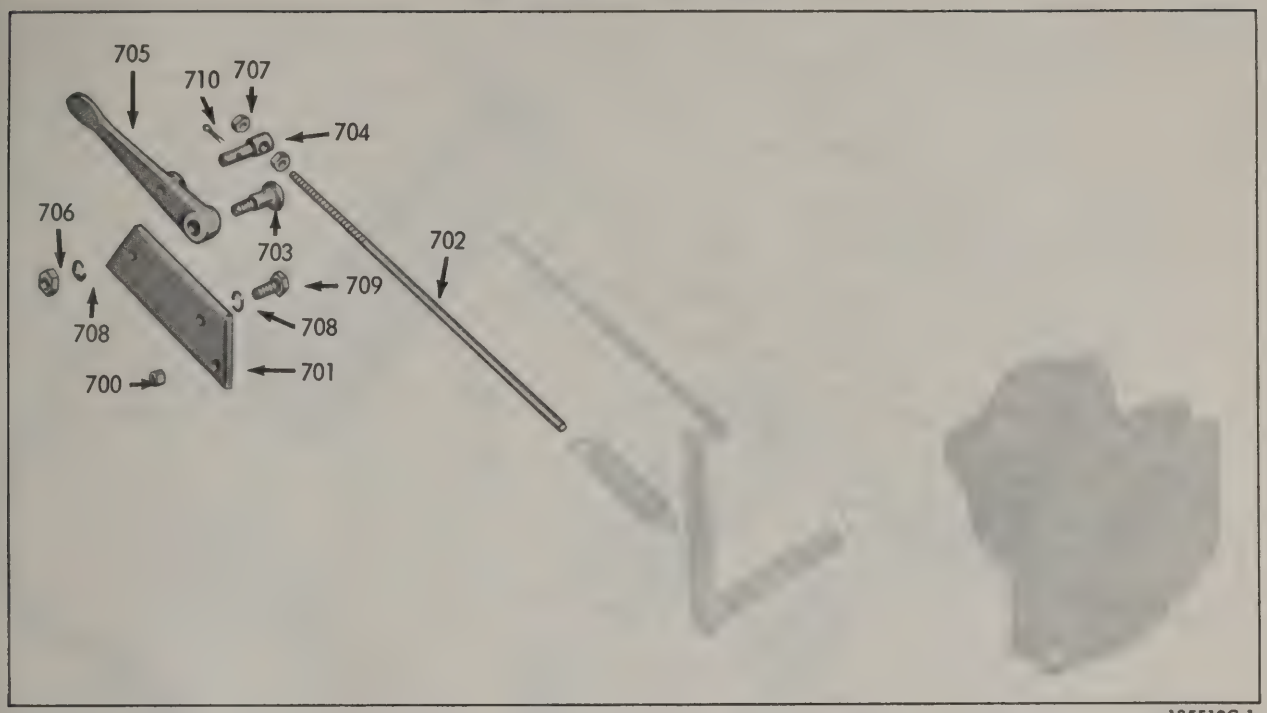


135518C-1

| REF. NO. | PART NUMBER | DESCRIPTION | NO. REQ. | NET WEIGHT LBS | NET WEIGHT OZ |
|---|---|---|---|---|---|
| 700 | HF-417 | **SPACER** for control lever bracket | 1 | | 1 |
| 701 | PG-466 | **BRACKET** for control lever | 1 | | 2 |
| 702 | PI-147-B | **ADJUSTING SCREW**<br>PI-147-A, replaced by PI-147-B. | 1 | | 2 |
| 703 | TC-380 | **FULCRUM PIN** for control lever | 1 | | 1 |
| 704 | TC-381-1 | **PIN** for adjusting screw<br>TC-381 (with tapped hole), replaced by TC-381-1 and 2 PD-115 nuts. | 1 | | 1 |
| 705 | VB-142 | **IDLE CONTROL LEVER** | 1 | | 4 |
| | | **STANDARD HARDWARE** | | | |
| 706 | PD-77 | **NUT,** 1/4"-20 thread, hexagon steel<br>For fulcrum pin. | 1 | | 1 |
| 707 | PD-115 | **NUT,** No. 10-32 thread, hexagon steel<br>For adjusting screw. | 2 | | 1 |
| 708 | PE-3 | **LOCKWASHER,** 1/4" Positive<br>1-for fulcrum pin.<br>1-for bracket mounting. | 2 | | 1 |
| 709 | XD-6 | **SCREW,** 1/4"-20 thread x 3/4" long, hexagon head<br>For bracket mounting. | 1 | | 1 |
| 710 | XI-1 | **COTTER PIN,** 1/16" x 1/2" long<br>For adjusting screw pin. | 1 | | 1 |

Order parts from nearest ***SERVICE STATION*** shown in directory following parts list.
***IMPORTANT:*** Always give Model, Specification and Serial Numbers as shown on name plate.

# ELECTRIC STARTER, GENERATOR AND DISTRIBUTOR IGNITION FOR MODEL VP4D ENGINE

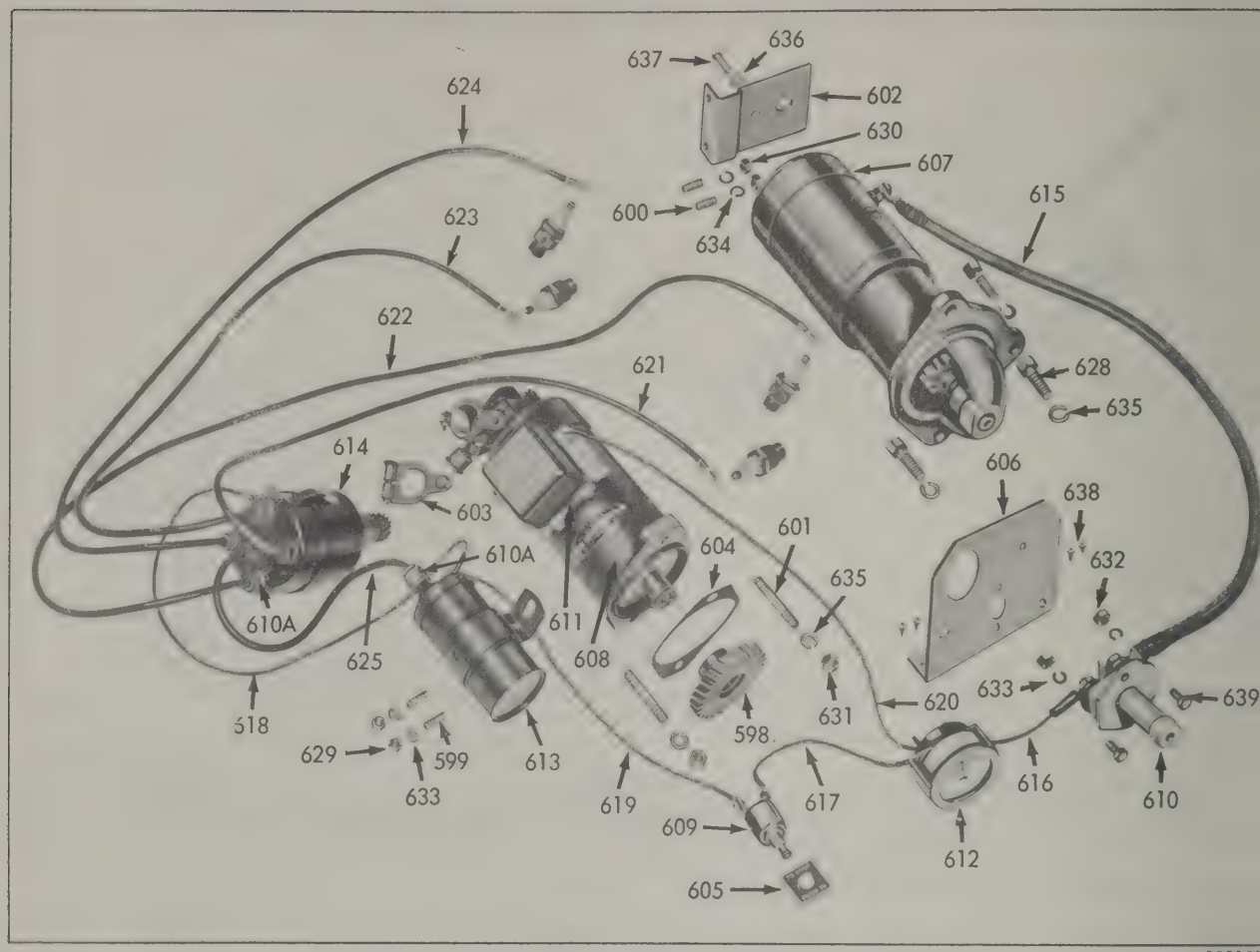


180192

| Ref. No. | Part Number | Description | No. Req | Net Wt. Lb | Net Wt. Oz |
|---|---|---|---|---|---|
| 598 | GD-107 | **DRIVE GEAR** for generator | 1 | | 8 |
| 599 | PC-111 | **STUD** for mounting ignition coil to case | 2 | | 1 |
| | XA-34 | **SCREW,** 1/4"-20 thread x 1/2" long, round head. For mounting coil to power unit house panel. | | | |
| 600 | PC-396 | **STUD** for mounting starter bracket | 2 | | 1 |
| 601 | PC-429 | **STUD** for mounting generator | 2 | | 2 |
| 602 | PG-515-A | **SUPPORT BRACKET** for YA-10 starter. PG-515, replaced by PG-515-A. PG-439 for YA-4-B starter. | 1 | | 5 |
| 603 | PG-543-A | **ADVANCE ARM ASSEMBLY** For distributor—Auto-Lite IG-2860-A3. | 1 | | 3 |
| 604 | QD-616 | **GASKET** for mounting generator | 1 | | 1 |
| 605 | SD-109 | **TAG** for ignition switch | 1 | | 1 |
| 606 | VE-559 | **CONTROL PANEL** | 1 | | 10 |
| 607 | *YA-10-3 | **ELECTRIC STARTER** (6 volt), Auto-Lite No. MZ-4175. Was Auto-Lite No. MZ-4118, replaced by MZ-4175 which has dust proof Bendix. | 1 | 17 | |

| Ref. No. | Part Number | Description | No. Req | Net Lb |
|---|---|---|---|---|
| | | YA-4-B (Auto-Lite No. MAK-4002), replaced by YA-10-3 but PG-515A bracket must also be ordered. **NOTE:** For all repairs contact the Electric Auto-Lite Co. at Toledo, Ohio, or their nearest service station. For electric starter service parts, refer to illustration immediately following this parts list. *The —3 behind the YA-10 part number, designates that a 3/4" dia. clean out hole is drilled in the pinion housing by Wisconsin Motor Corp. | | |
| 608 | YB-16-C | **GENERATOR** (6 volt), Auto-Lite No. GAS-4303, used with **YF-10 Half-Speed Distributor.** | 1 | 15 |
| | YB-16-A | Auto-Lite No. GAS-4301, used with **YF-6 Engine Speed Distributor.** **NOTE:** For all repairs contact the Electric Auto-Lite Co. at Toledo, Ohio, or their nearest service station. For generator service parts, refer to illustration immediately following this parts list. | 1 | 15 |

Order parts from nearest ***SERVICE STATION*** shown in directory following parts list.
***IMPORTANT:*** Always give Model, Specification and Serial Numbers as shown on name plate.

# ELECTRIC STARTER, GENERATOR AND DISTRIBUTOR IGNITION FOR MODEL VP4D ENGINE

| Ref. No. | Part Number | Description | No. Req | Net Wt. Lb | Net Wt. Oz |
|---|---|---|---|---|---|
| 609 | YC-9-B | **IGNITION SWITCH** | 1 | | 2 |
| 610 | YC-10 | **STARTING SWITCH** | 1 | | 4 |
| 610A | YD-20 | **TERMINAL PROTECTOR** for ign. wires | 6 | | 1 |
| 611 | YD-165 | **JUMPER STRIP,** for generator regulator | 1 | | 1 |
| 612 | YE-2 | **AMMETER,** Moto-Meter No. 5722A | 1 | | 6 |
| 613 | YF-4-A | **IGNITION COIL** (6 volt), Auto-Lite No. IG-6001 | 1 | 1 | 14 |
| 614 | YF-10-S1 | **DISTRIBUTOR, HALF SPEED,** Auto-Lite No. IAD-4036A<br>Includes PG-543A Adv. Arm Assembly. | 1 | 3 | 3 |
| | YF-6 | Auto-Lite No. IGW-4159-A, **ENGINE SPEED DISTRIBUTOR** | 1 | 2 | 7 |
| | | **NOTE:** The YF-10-S1 Half-Speed Distributor replaces the YF-6 Engine Speed Distributor wherever sufficient installation clearances make this change possible, but the YB-16-C generator has to be used. Refer to Wisconsin Motor No. SK-1158 Conversion Kit for this change over. For all repairs contact the Electric Auto-Lite Co. at Toledo, Ohio, or their nearest service station. For distributor service parts, refer to illustration immediately following this parts list. | | | |
| 615 | YL-249 | **STARTER CABLE ASSEMBLY**<br>28" long, starter to switch.<br>No. 4 A.W.G. cable with terminals. | 1 | | 4 |
| 616 | YL-131 | **IGNITION WIRE ASSEMBLY**<br>5" long, starting switch to ammeter.<br>No. 14 GA. cable with terminals and insulators. | 1 | | 1 |
| 617 | YL-132 | **IGNITION WIRE ASSEMBLY**<br>6-1/2" long, ammeter to ignition switch.<br>No. 14 GA. cable with terminals and insulators. | 1 | | 1 |
| 618 | YL-162 | **IGNITION WIRE ASSEMBLY**<br>10-1/2" long, coil to distributor.<br>No. 14 GA. cable with terminals and insulators. For open engines. | 1 | | 1 |
| | YL-250 | **WIRE ASSEMBLY,** 28-1/2" long<br>For power unit engines. | 1 | | 1 |
| 619 | YL-163 | **IGNITION WIRE ASSEMBLY**<br>27-1/2" long, coil to switch.<br>No. 14 GA. cable with terminals and insulators. For open engines. | 1 | | 1 |
| | YL-212 | **WIRE ASSEMBLY,** 5" long<br>For power unit engines. | 1 | | 1 |
| 620 | YL-181 | **IGNITION WIRE ASSEMBLY**<br>20-1/2" long, ammeter to generator.<br>No. 14 GA. cable with terminals and insulators. | 1 | | 1 |
| 621 | YL-173 | **IGNITION CABLE ASSEMBLY**<br>31" long, distributor to No. 1 spark plug<br>7mm cable with terminals. | 1 | | 2 |
| 622 | YL-251 | **IGNITION CABLE ASSEMBLY**<br>42-3/4" long, distributor to No. 2 spark plug. 7mm cable with terminals. | 1 | | 2 |
| 623 | YL-252 | **IGNITION CABLE ASSEMBLY**<br>37-3/4" long, distributor to No. 3 spark plug. 7mm cable with terminals. | 1 | | 2 |
| 624 | YL-253 | **IGNITION CABLE ASSEMBLY**<br>45-3/4" long, distributor to No. 4 spark plug. 7mm cable with terminals. | 1 | | 2 |
| * 625 | YL-254 | **IGNITION WIRE ASSEMBLY**<br>15" long, coil to distributor.<br>7mm cable with terminals.<br>For open engines. | 1 | | 1 |
| | YL-165 | **CABLE ASSEMBLY,** 27" long<br>For power unit engines. | 1 | | 1 |
| | | ***NOTE:** The high tension and spark plug ignition cables, marked with an (*) asterisk, are for the std. **YF-10 Half-Speed Distributor.** The following ignition cable assemblies are for the **YF-6 Engine Speed Distributor.** | | | |
| | YL-153 | **IGNITION CABLE ASSEMBLY**<br>35" long 7mm cable with spark plug terminal. Distributor to No. 1 and No. 3 spark plugs. | 2 | | 2 |
| | YL-154 | **IGNITION CABLE ASSEMBLY**<br>41" long 7mm cable with spark plug terminal. Distributor to No. 2 spark plug. | 1 | | 2 |
| | YL-157 | **IGNITION CABLE ASSEMBLY**<br>43" long 7mm cable with spark plug terminal. Distributor to No. 4 spark plug. | 1 | | 2 |
| | YL-158 | **IGNITION CABLE ASSEMBLY**<br>30" long, 7mm cable with terminal.<br>Distributor to coil. | 1 | | 1 |
| | | **STANDARD HARDWARE** | | | |
| 628 | PB-24 | **SCREW,** 3/8"-24 thread x 1-1/8" long, hexagon head<br>For mounting electric starter. | 3 | | 2 |
| 629 | PD-9 | **NUT,** 1/4"-28 thread, hexagon steel<br>For mounting ignition coil to studs in crankcase. | 2 | | 1 |
| | PD-77 | **NUT,** 1/4"-20 thread, hexagon steel<br>For mt'g coil to power unit house panel | 2 | | 1 |
| 630 | PD-10 | **NUT,** 5/16"-24 thread, hexagon steel<br>For mounting starter bracket. | 2 | | 1 |
| 631 | PD-11 | **NUT,** 3/8"-24 thread, hexagon steel<br>For mounting generator. | 2 | | 1 |
| 632 | PD-77 | **NUT,** 1/4"-20 thread, hexagon steel<br>For starter switch mounting. | 2 | | 1 |
| 633 | PE-3 | **LOCKWASHER,** 1/4" Positive<br>2-for starter switch mounting.<br>2-for ignition coil mounting. | 4 | | 1 |
| 634 | PE-4 | **LOCKWASHER,** 5/16" Positive<br>For mounting starter bracket. | 2 | | 1 |
| 635 | PE-5 | **LOCKWASHER,** 3/8" Positive<br>2-for mounting generator.<br>3-for mounting electric starter. | 5 | | 1 |
| 636 | PH-194 | **PLAIN WASHER,** 1/4" I.D. x 5/8" O.D. x 1/16" thick, steel<br>For starter bracket to starter. | 1 | | 1 |
| 637 | XA-8 | **SCREW,** No. 10-32 thread x 1/2" long, round head<br>For starter bracket to starter. | 1 | | 1 |
| 638 | XA-65 | **SCREW,** No. 8 x 1/2" long, self tapping sheet metal<br>For mounting control panel. | 4 | | 1 |
| 639 | XD-5 | **SCREW,** 1/4"-20 thread x 5/8" long, hexagon head<br>For starter switch mounting. | 2 | | 1 |

Order parts from nearest ***SERVICE STATION*** shown in directory following parts list.

***IMPORTANT:*** Always give Model, Specification and Serial Numbers as shown on name plate.

# ELECTRIC AUTO-LITE †MZ-4175 STARTING MOTOR PARTS LIST

## WISCONSIN MOTOR PART NUMBER YA-10

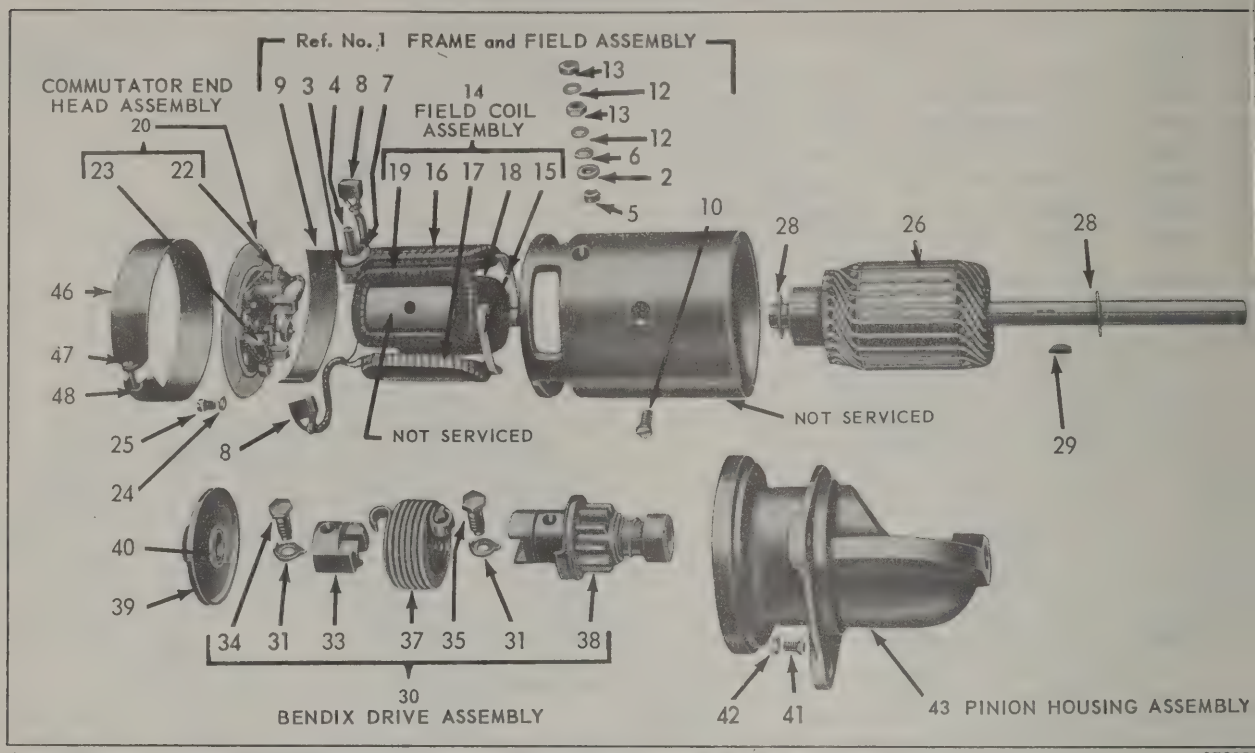


† MZ-4118 replaced by MZ-4175 with dust proof Bendix. Individual parts changes noted below.

17985S

| Ref No | Auto-Lite Part Number | Description | No Req |
|---|---|---|---|
| 1 | MZ-2001M | **FRAME** and **FIELD ASSEMBLY** | 1 |
| | | MZ-2001 repl. by MZ-2001M: Interchangeable. | |
| | | Consisting of: | |
| 2 | MAB-31-A | **INSULATING WASHER** for terminal stud | 1 |
| 3 | MU-14 | **TERMINAL** | 1 |
| 4 | MU-28 | **TERMINAL STUD** | 1 |
| 5 | MU-31 | **INSULATING BUSHING** for terminal stud | 1 |
| 6 | MU-37 | **PLAIN WASHER**, 5/16", for terminal stud | 1 |
| 7 | MU-39A | **INSULATING WASHER** for terminal stud | 1 |
| 8 | MZ-12 * | **INSULATED BRUSH** | 2 |
| 9 | MZ-30A | **INSULATION** for field coils | 1 |
| 10 | MZ-38A | **SCREW** for pole shoe | 4 |
| 11 | MZ-74 | **EQUALIZER** (not illustrated) | 1 |
| 12 | 12X-1014 | **LOCKWASHER**, 5/16", for terminal stud | 2 |
| 13 | 8X-1376 | **NUT** for terminal stud, 5/16"-24 thread, hex. | 2 |
| 14 | MZ-3005S | **FIELD COIL ASSEMBLY** | 1 |
| | | Consisting of: | |
| 15 | MZ-32 | **CONNECTOR** for field coil | 2 |
| 16 | MZ-1007 | **FIELD COIL**, U.L. | 1 |
| 17 | MZ-1008 | **FIELD COIL**, L.R. | 1 |
| 18 | MZ-1009 | **FIELD COIL**, L.L. | 1 |
| 19 | MZ-1010 | **FIELD COIL**, U.R. | 1 |
| 20 | MZ-2002B | **COMMUTATOR END HEAD ASSEMBLY** | 1 |
| | | Includes: | |
| 21 | MAD-110 | **FELT** (not illustrated) | 1 |
| 22 | MZ-19 | **BRUSH SPRING** | 4 |
| 23 | MZ-1034S * | **GROUNDED BRUSH** | 2 |
| 24 | 12X-196 | **LOCKWASHER** for head screw, No. 10 | 4 |
| 25 | 8X-902 | **SCREW** for head mounting | 4 |
| | | No. 10-32 thread x 3/8" long, fillister head. | |
| 26 | MZ-2089 | **ARMATURE ASSEMBLY** | 1 |
| | | Includes: | |
| 27 | MZ-51 | **THRUST SPACER** (not illustrated) | 1 |

| Ref No | Auto-Lite Part Number | Description | No Req |
|---|---|---|---|
| 28 | MU-54 | **THRUST WASHER** for armature | |
| 29 | X-261 | **KEY** for mounting Bendix, No. 6 Woodruff | |
| 30 | EBB-36A | **BENDIX DRIVE ASSEMBLY** | |
| | | EBA-36A repl. by EBB-36A: Interchangeable. | |
| | | Consisting of: | |
| 31 | EB-108A | **LOCKWASHERS** | |
| 32 | EB-7819SA | **COMPRESSION SLEEVE** (not illustrated) | |
| 33 | EB-8503A | **DRIVING HEAD** | |
| 34 | EB-8506A | **SCREW** for spring head | |
| 35 | EB-8507A | **SCREW** for spring shaft | |
| 36 | EB-8734A | **TAKE-UP RING** (not illustrated) | |
| 37 | EBA-405A | **DRIVE SPRING** | |
| 38 | EBB-3611A | **SHAFT** and **PINION** | |
| | | EBA-3611A repl. by EBB-3611A: Interchangeable. | |
| 39 | MAB-2040 | **BEARING** and **PLATE ASSEMBLY** | |
| | | Includes: | |
| 40 | MG-77A | **BRONZE BEARING** | |
| 41 | MZ-52 | **SCREW** for pinion housing mounting | |
| | | No. 10-32 thread x 31/32" long. | |
| 42 | 12X-196 | **LOCKWASHER** for housing screw, No. 10 | |
| 43 | PS-1214 | **PINION HOUSING ASSEMBLY** | |
| | | Includes: | |
| 44 | MAB-88 | **DOWEL PIN** (not illustrated) | |
| 45 | MP-41A | **BRONZE BEARING** (not illustrated) | |
| 46 | MZ-1024U | **COVER BAND** | |
| | | MZ-1024 repl. by MZ-1024U: Interchangeable. | |
| 47 | 8X-714 | **SCREW** for cover band | |
| | | No. 10-32 thread x 1½" long, round head. | |
| 48 | 8X-794 | **NUT** for cover band | |
| | | No. 10-32 thread, square. | |
| | | * **BRUSH SET for SERVICE, MZ-2012AS** | |

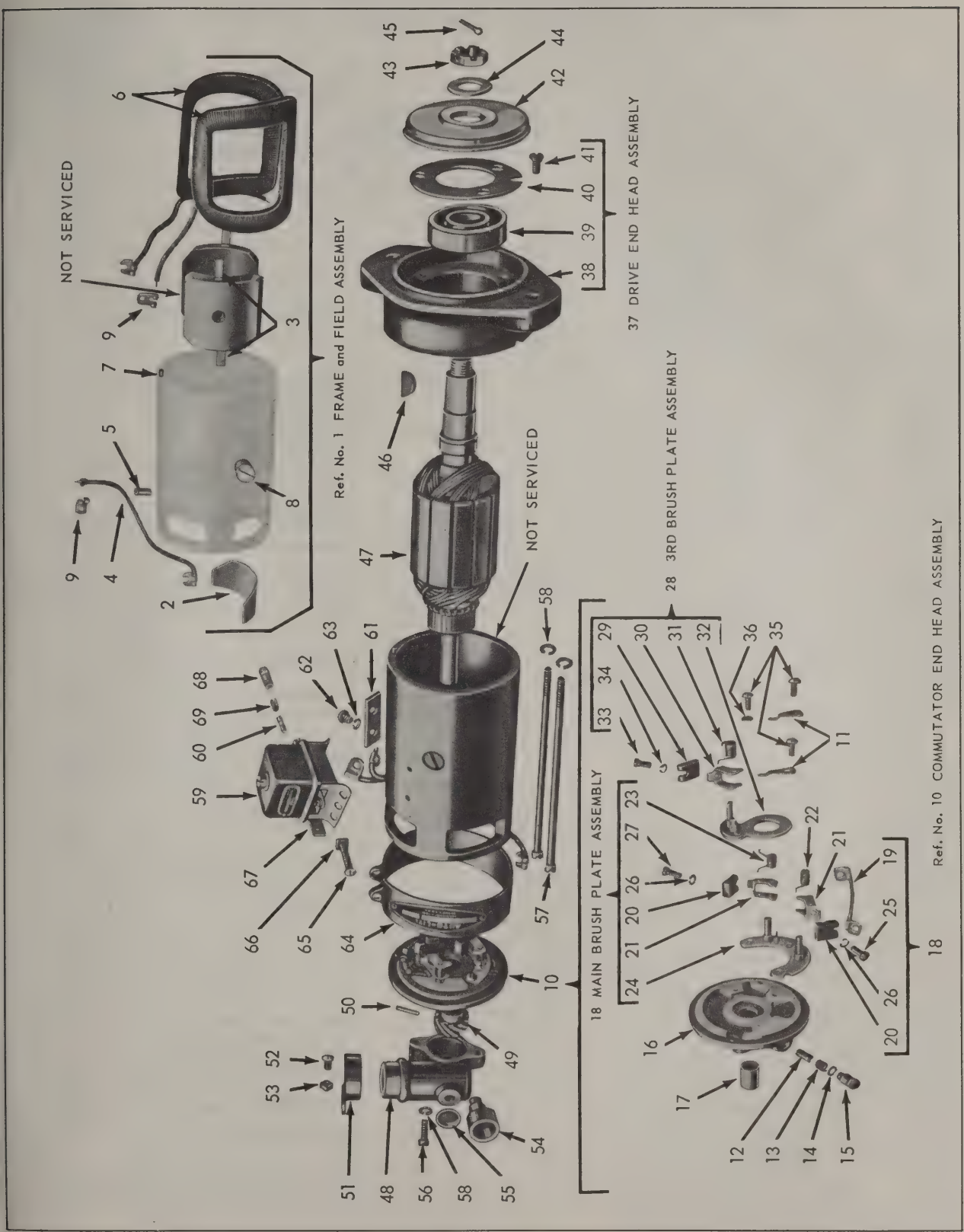


180102C

Parts are identified by reference number. See parts list for correct part number.

## YB-16-A (GAS-4301) Generator – used with YF-6 Engine Speed Distributor
## YB-16-C (GAS-4303) Generator – used with YF-10 Half Speed Distributor

NOTE: These generators are identical in appearance, but not interchangeable as a unit unless distributor is also changed. The major difference being the distributor drive gear, Ref. No. 49. All parts are interchangeable for both generators except where noted.

| Ref No | Auto-Lite Part Number | Description | No Req |
|---|---|---|---|
| 1 | GAS-2167 | **FRAME** and **FIELD ASSEMBLY** | 1 |
| | | Consisting of: | |
| 2 | GAS-44 | **INSULATION** for field coil connection | 1 |
| 3 | GAS-45 | **HOLDER** for field coil | 4 |
| 4 | GAS-86 | **LEAD WIRE** with terminal | 1 |
| 5 | GAS-121 | **INSULATING BUSHING** | 1 |
| 6 | GAS-2005D | **FIELD COIL ASSEMBLY** complete | 1 |
| 7 | MN-21 | **DOWEL PIN** | 2 |
| 8 | MZ-38A | **POLE SHOE SCREW** | 2 |
| 9 | X-755 | **TERMINAL** | 2 |
| 10 | GAS-2174A | **COMMUTATOR END HEAD ASSEMBLY** | 1 |
| | | For YB-16-A (GAS-4301) generator. | |
| | GAS-2174B | For YB-16-C (GAS-4303) generator | |
| | | Consisting of: | |
| 11 | GAS-51 | **SPRING RETAINER** for 3rd brush plate | 2 |
| 12 | GAS-281 | **FELT WICK** | 1 |
| 13 | IG-515A | **SPRING** for felt wick | 1 |
| 14 | X-1275 | **WASHER** for felt wick | 1 |
| 15 | X-1573 | **OILER** (Straight) YB-16-A (GAS-4301) | 1 |
| | X-3172 | (Elbow Type) YB-16-C (GAS-4303) | |
| 16 | GAS-1174 | **HEAD** with GAS-49 bearing | 1 |
| 17 | GAS-49 | **BRONZE BEARING** | 1 |
| 18 | GAS-2021RA | **MAIN BRUSH PLATE ASSEMBLY** | 1 |
| | | Consisting of: | |
| 19 | GAL-31 | **GROUND WIRE** with terminals | 1 |
| 20 | GAS-12 * | **MAIN BRUSH** | 2 |
| 21 | GAS-15 | **BRUSH HOLDER** | 2 |
| 22 | GAS-17 | **SPRING** for grounded brush | 1 |
| 23 | GAS-18 | **SPRING** for insulated brush | 1 |
| 24 | GAS-1021R | **MAIN BRUSH PLATE** | 1 |
| 25 | 8X-122 | **SCREW** for grounded brush | 1 |
| | | No. 8-32 thread x 1/2" long, fillister head.. | |
| 26 | 12X-195 | **LOCKWASHER** for brush screw, No. 8 | 2 |
| 27 | 8X-1496 | **SCREW** for insulated brush | 1 |
| | | No. 8-32 thread x 7/16" long, binding head. | |
| 28 | GAS-2126A | **3RD BRUSH PLATE ASSEMBLY** | 1 |
| | | Consisting of: | |
| 29 | GAS-13 * | **THIRD BRUSH** | 1 |
| 30 | GAS-15 | **BRUSH HOLDER** | 1 |
| 31 | GAS-17 | **BRUSH SPRING** | 1 |
| 32 | GAS-1126 | **3rd BRUSH PLATE** | 1 |
| 33 | 8X-878 | **SCREW** for 3rd brush | 1 |
| | | No. 8-32 x 7/16" long, fillister head. | |
| 34 | 12X-195 | **LOCKWASHER** for 3rd brush screw, No. 8 .. | 1 |
| 35 | 8X-55 | **SCREW** for plate mounting | 3 |
| | | No. 8-32 thread x 3/8" long, round head. | |
| 36 | 12X-195 | **LOCKWASHER** for plate mounting, No. 8 | 1 |
| 37 | GAS-1232 | **DRIVE END HEAD ASSEMBLY** | 1 |
| | | For YB-16-A (GAS-4301) generator. | |
| | GAS-1232B | For YB-16-C (GAS-4303) generator. | |
| | | Consisting of: | |
| 38 | GAS-232 | **HEAD,** for YB-16-A (GAS-4301) | 1 |
| | GAS-232B | For YB-16-C (GAS-4303) | |
| 39 | X-378 | **BALL BEARING,** for YB-16-A (GAS-4301) | 1 |
| | X-3003 | For YB-16-C (GAS-4303) | |
| 40 | GAS-177 | **BEARING RETAINER** | 1 |
| 41 | 8X-63 | **SCREW** for retainer | 3 |
| | | No. 8-32 thread x 3/8" long, flat head. | |
| 42 | GAS-1176 | **OIL THROWER** | 1 |
| 43 | X-835 | **NUT** for armature shaft, ½"-20 thread, slotted | 1 |
| 44 | GK-174A | **WASHER** for armature shaft nut, ½" plain | 1 |
| 45 | X-404 | **COTTER PIN** for nut, 3/32" x 1" long | 1 |
| 46 | X-263 | **KEY** for drive gear, No. 8 Woodruff | 1 |
| 47 | GAS-2175 | **ARMATURE** | 1 |
| 48 | GT-121B | **DISTRIBUTOR MOUNTING HOUSING** | 1 |
| 49 | GE-61 | **DISTRIBUTOR DRIVER GEAR,** 11 teeth | 1 |
| | | For YB-16-A (GAS-4301). | |
| | GE-45 | 7 teeth, For YB-16-C (GAS-4303) | |
| 50 | IGB-354 | **PIN** for driver gear, for YB-16-A (GAS-4301).. | 1 |
| | SW-213 | **RIVET,** for YB-16-C (GAS-4303) | |
| 51 | GAG-58 | **CLAMP** for distributor housing | 1 |
| 52 | 8X-53 | **SCREW** for clamp, No. 8-32 thread x 5/8" long, round head | 1 |
| 53 | 8X-141 | **NUT** for clamp screw, No. 8-32 thread, hexagon | 1 |
| 54 | X-382 | **GREASE CUP** | 1 |
| 55 | GW-19 | **COVER** for distributor housing | 1 |
| 56 | 8X-900 | **SCREW** for distributor housing mounting | 3 |
| | | No. 10-32 thread x 7/8" long, fillister head. | |
| 57 | GAS-20A | **THRU BOLT** for end heads mounting | 2 |
| 58 | 12X-196 | **LOCKWASHER,** No. 10 Positive | 5 |
| | | 2-for thru bolts. | |
| | | 3-for distributor housing. | |
| 59 | TC-4329C | **TWO CHARGE REGULATOR** | 1 |
| 60 | X-842 | **FUSE** for regulator, 5 Amp | 1 |
| 61 | GAS-168 | **SPACER** for mounting regulator | 2 |
| 62 | 8X-311 | **SCREW** for mounting regulator | 4 |
| | | No. 10-32 thread x 3/8" long, round head. | |
| 63 | 12X-196 | **LOCKWASHER** for mounting regulator, No. 10 | 4 |
| 64 | GAS-1024JS | **BAND** for cover | 1 |
| 65 | X-714 | **SCREW** for cover band | 1 |
| | | No. 10-32 thread x 1½" long, round head. | |
| 66 | 8X-794 | **NUT** for cover band screw | 1 |
| | | No. 10-32 thread, square. | |
| 67 | TC-51E | **CARBON RESISTOR** for regulator | 1 |
| 68 | TC-1050 | **FUSE HOLDER** | 1 |
| 69 | TC-48 | **FUSE INSULATOR** | 1 |
| | | * **BRUSH SET for SERVICE, GAS-2012** | |

# ELECTRIC AUTO-LITE IAD-4036A HALF SPEED DISTRIBUTOR, PARTS LIST

## WISCONSIN MOTOR PART NUMBER YF-10-S1

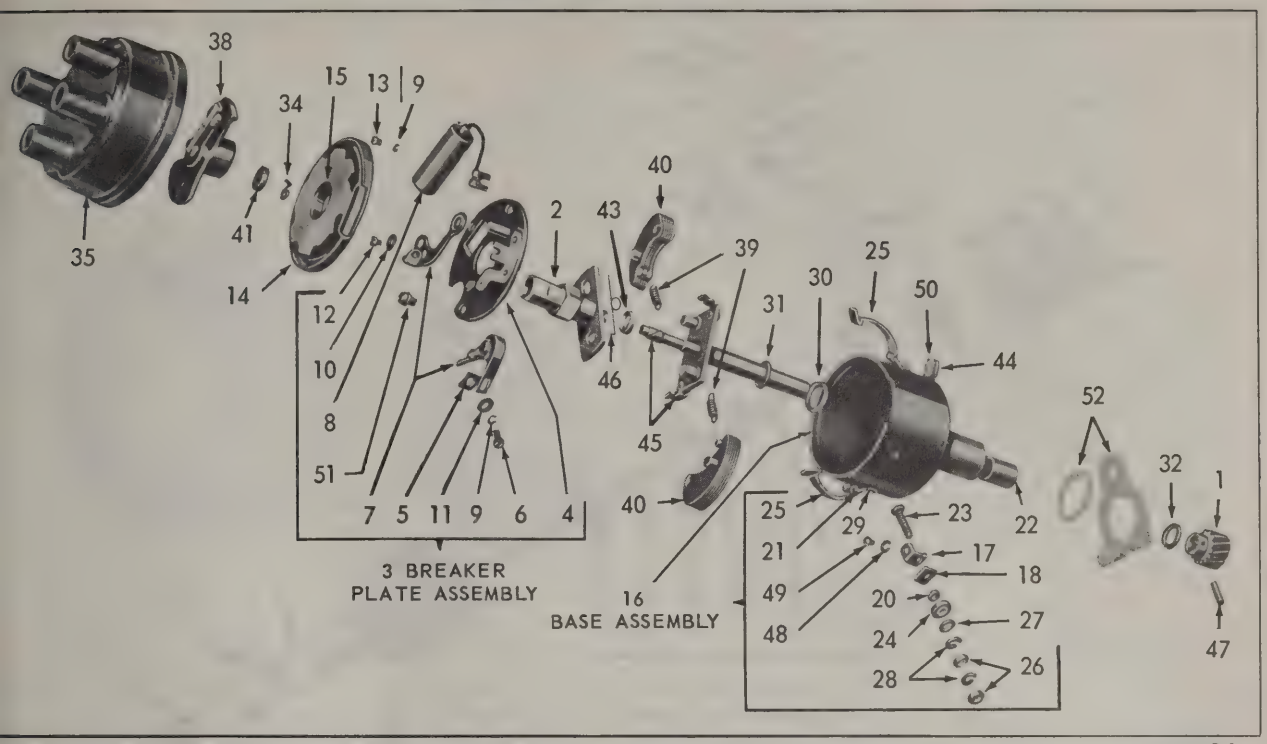


187616C-1

| Ref No | Auto-Lite Part Number | Description | No Req |
|---|---|---|---|
| 1 | GE-89 | FOLLOWER GEAR | 1 |
| 2 | IAD-1100LH-1 | CAM and STOP PLATE, 4 cyl., L.H. | 1 |
| 3 | IAD-2004 | BREAKER PLATE ASSEMBLY<br>Consisting of: | 1 |
| 4 | IAD-1004 | BREAKER PLATE | 1 |
| 5 | IG-676 | SPRING CLIP for contact arm | 1 |
| 6 | IGC-175 | SCREW for spring clip<br>No. 6-32 thread x 5/16" long, hexagon head | 1 |
| 7 | IGP-3028FS | BREAKER CONTACT SET | 1 |
| 8 | IGW-3139 | CONDENSER | 1 |
| 9 | X-194 | LOCKWASHER, No. 6<br>2-for condenser mounting.<br>1-for spring clip. | 3 |
| 10 | 8X-350 | PLAIN WASHER for contact lockscrew, No. 8 | 1 |
| 11 | 8X-353 | PLAIN WASHER for spring clip screw, No. 6 | 1 |
| 12 | 8X-884 | LOCKSCREW for breaker contact<br>No. 8-32 thread x 3/16" long, fillister head | 1 |
| 13 | 8X-1546 | SCREW for condenser mounting<br>No. 6-32 thread x 5/32" long, fillister head | 1 |
| 14 | IAD-2015 | DUST COVER ASSEMBLY<br>Includes: | 1 |
| 15 | IAD-12 | FELT WASHER | 1 |
| 16 | IAD-2020 | BASE ASSEMBLY<br>Includes: | 1 |
| 17 | IAD-7 | CONNECTOR for terminal stud | 1 |
| 18 | IAD-8 | INSULATOR for terminal stud | 1 |
| 19 | IAD-9 | BRACKET for mounting breaker plate<br>(Not illustrated) | 2 |
| 20 | IAD-10 | INSULATING BUSHING for terminal stud | 1 |
| 21 | IAD-14 | BRACKET for cap spring | 2 |
| 22 | IG-579A | BRONZE BEARING | 2 |
| 23 | IGL-8A | TERMINAL STUD | 1 |
| 24 | IGL-9 | INSULATING WASHER for terminal stud | 1 |
| 25 | IGZ-9 | CLAMP SPRING for cap | 2 |
| 26 | 8X-173 | NUT for terminal stud, No. 10-32 thread | 2 |
| 27 | 8X-183A | PLAIN WASHER for terminal stud, No. 10 | 1 |
| 28 | 12X-196 | LOCKWASHER for terminal stud, No. 10 | 2 |
| 29 | X-525 | RIVET for clamp spring | 4 |
| 30 | IAO-10 | THRUST WASHER (inner)<br>For drive shaft (upper). | 1 |
| 31 | IAO-11 | THRUST WASHER (outer)<br>For drive shaft (upper). | 1 |
| 32 | IG-90 | THRUST WASHER for drive shaft (lower) | 1 |
| 33 | IG-94 | TERMINAL for H.T. wire (not illustrated) | 5 |
| 34 | IG-680 | SNAP RING for cam | 1 |
| 35 | IG-1324D | DISTRIBUTOR CAP ASSEMBLY<br>Includes: | 1 |
| 36 | IG-514 | PLUNGER CONTACT (not illustrated) | 1 |
| 37 | IG-515A | CONTACT SPRING (not illustrated) | 1 |
| 38 | IG-1657RA | ROTOR | 1 |
| 39 | IGC-211S | SPRING SET for governor weights | 1 |
| 40 | IGC-2168L | GOVERNOR WEIGHT | 2 |
| 41 | IGH-28 | FELT WICK for cam sleeve | 1 |
| 42 | IGS-32 | RUBBER PLUG for venthole (not illustrated) | 1 |
| 43 | IGS-99 | CAM SPACER | 1 |
| 44 | IGS-117 | FELT WICK | 1 |
| 45 | IGS-1180L | DRIVE SHAFT | 1 |
| 46 | IGT-69 | ANTI-RATTLE SPRING | 1 |
| 47 | SW-213 | RIVET for gear | 1 |
| 48 | 12X-194 | LOCKWASHER for connector screw, No. 6 | 1 |
| 49 | 8X-301 | SCREW for connector<br>No. 6-32 thread x 3/16" long, round head. | 1 |
| 50 | X-490A | OILER | 1 |
| 51 | X-2878 | SCREW for breaker plate mounting<br>No. 10-32 thread x 5/16" long, fillister head | 2 |
| 52 | IG-2860-A3 | ADVANCE ARM ASSEMBLY<br>Wis. Motor No. PG-543-A.<br>NOTE: Not included on distributor when purchased from Auto-Lite.<br>Consists of:<br>IG-816 Bushing — 8X-794 Clamp nut<br>IG-860A Arm — 8X-871 Clamp screw<br>8X-86 Lockscrew — X-199 Lockwasher<br>8X-163 Locknut | 1 |

# ELECTRIC AUTO-LITE IGW-4159A DISTRIBUTOR PARTS LIST

## WISCONSIN MOTOR PART NUMBER YF-6

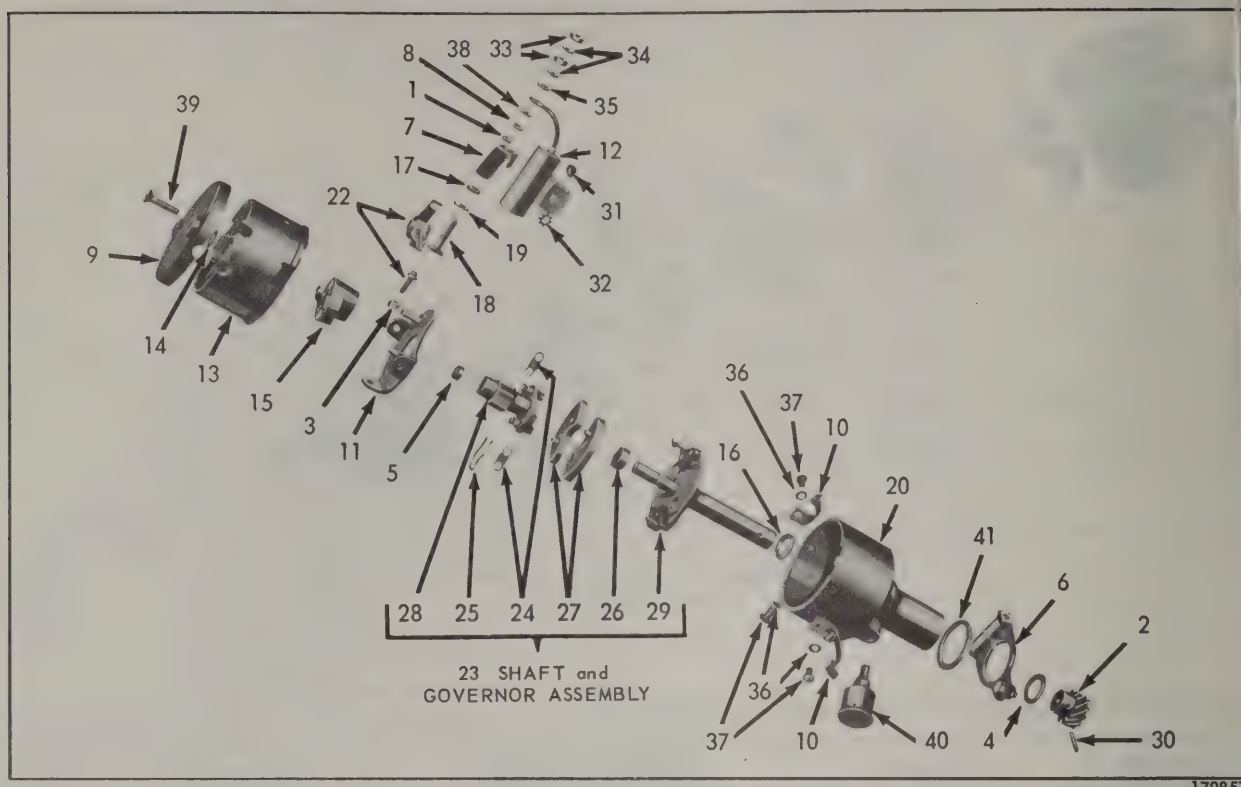


179857

| Ref No | Auto-Lite Part Number | Description | No Req |
|---|---|---|---|
| 1 | CB-140 | **INSULATING BUSHING** for terminal stud | 1 |
| 2 | GE-50 | **FOLLOWER GEAR** | 1 |
| 3 | IB-23 | **LOCKNUT** for contact screw | 1 |
| 4 | IG-90 | **THRUST WASHER** for drive shaft, lower | 1 |
| 5 | IG-495 | **FELT WICK** for cam sleeve | 1 |
| 6 | IG-2860A-3 | **ADVANCE ARM** | 1 |
| 7 | IGB-21 | **INSULATION** for terminal stud | 1 |
| 8 | IGB-22 | **INSULATING WASHER** for terminal stud | 1 |
| 9 | IGB-224 | **COVER** for distributor cap | 1 |
| 10 | IGB-1007 | **CLAMP SPRING** and **HINGE** for cap | 2 |
| 11 | IGB-1010 | **BREAKER PLATE** | 1 |
| 12 | IGB-1025E | **CONDENSER** | 1 |
| 13 | IGB-1225D | **DISTRIBUTOR CAP ASSEMBLY** | 1 |
| 14 | IGB-230 | Includes: **RUBBER GASKET** | 2 |
| 15 | IGB-1239 | **ROTOR** | 1 |
| 16 | IGS-104 | **THRUST WASHER** for drive shaft, upper | 1 |
| 17 | IGW-38 | **INSULATING WASHER** for terminal stud | 1 |
| 18 | IGW-39 | **TERMINAL STUD** | 1 |
| 19 | IGW-54 | **WASHER** for terminal stud | 1 |
| 20 | IGW-2142 | **BASE ASSEMBLY** | 1 |
| 21 | IG-579A | Includes: **BRONZE BEARING** (not illustrated) | 2 |

| Ref No | Auto-Lite Part Number | Description | No Req |
|---|---|---|---|
| 22 | IGW-3028S | **BREAKER CONTACT SET** | 1 |
| 23 | IGW-3143L | **SHAFT** and **GOVERNOR ASSEMBLY** | 1 |
| | | Consisting of: | |
| 24 | IGB-327S | **SPRING SET** for governor weights | 1 |
| 25 | IGW-37 | **CAM RETAINING SPRING** | 1 |
| 26 | IGW-92 | **CAM SPACER** | 1 |
| 27 | IGW-1063L | **GOVERNOR WEIGHT** | 2 |
| 28 | IGW-2100LF | **CAM** and **STOP PLATE** | 1 |
| 29 | IGW-2143L | **DRIVE SHAFT** | 1 |
| 30 | IGB-248 | **PIN** for gear | 1 |
| 31 | 8X-59 | **SCREW** for condenser mounting<br>No. 8-32 thread x 3/16" long, round head. | 1 |
| 32 | X-1276 | **WASHER** for condenser mounting<br>Shakeproof No. 8 | 1 |
| 33 | 8X-173 | **NUT** for terminal stud<br>No. 10-32 thread, hexagon. | 2 |
| 34 | 12X-196 | **LOCKWASHER** for terminal stud, No. 10 | 2 |
| 35 | 8X-183A | **WASHER** for terminal stud, No. 10 plain | 1 |
| 36 | 12X-195 | **LOCKWASHER** for breaker plate, No. 8 | 3 |
| 37 | 8X-304 | **SCREW** for breaker plate mounting<br>No. 8-32 thread x 5/16" long, round head. | 3 |
| 38 | X-1270 | **WASHER** for terminal stud<br>Shakeproof No. 10 | 1 |
| 39 | 8X-1340 | **SCREW** for cover mounting<br>No. 8-32 thread x 3/4" long, countersunk head. | 2 |
| 40 | X-1601 | **GREASE CUP** | 1 |
| 41 | IG-816 | **THRUST WASHER** | 1 |

# WW-83 CLUTCH DRIVE HUB AND HOUSING ASSEMBLY FOR ROCKFORD CLUTCH AND POWER TAKE-OFF UNIT ON VP4D ENGINE

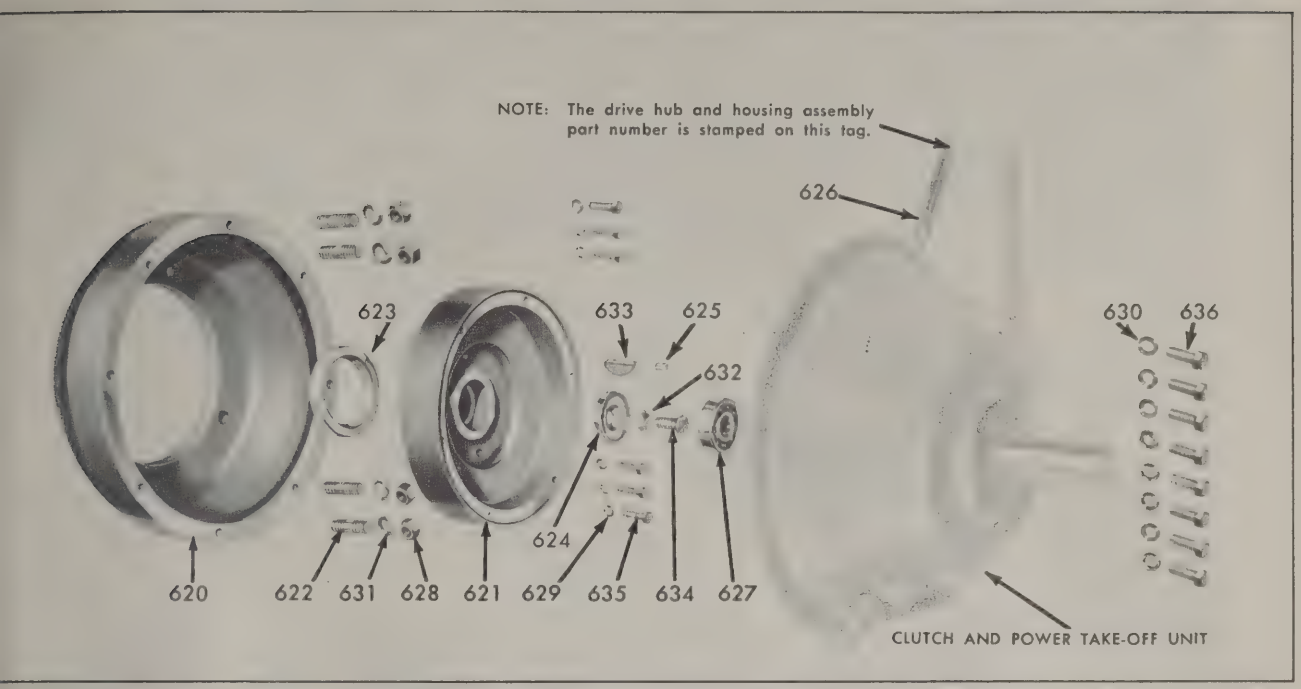


99749C

**The Above Assembly is Suitable for Mounting the Following Clutch and Power Take-off Unit**

| WISCONSIN MOTOR Part Number | ROCKFORD Part Number | NET WEIGHT lbs | NET WEIGHT oz | |
|---|---|---|---|---|
| WC-302-B | PTA-5822 | 55 | | **NOTE:** See Rockford illustration and parts list of Clutch and Power Take-off Parts. |

**NOTE:** Engines equipped with a Clutch and Power Take-off Unit require a special main bearing plate, crankshaft and crankcase as follows:

**BG-194-1-S1 MAIN BEARING PLATE ASSEMBLY** (not illustrated)
Consisting of:
1 BG-194-1 Bearing Plate
1 PH-278 Oil Seal

**CA-59A-2-S1 CRANKSHAFT ASSEMBLY** (not illustrated) for engines beginning with Serial No. 771501. Consisting of:
1 CA-59A-2 Crankshaft
1 GA-35A-1 Gear
2 ME-98 Bearings
1 PL-49 Key
1 RK-173 Oil Slinger

**CA-59-2-S1** For engines to and including Serial No. 771500.

**THE PART NUMBER OF THE CRANKCASE CAN BE FOUND STAMPED ON THE TAKE-OFF END OF THE CRANKCASE ABOVE THE MAIN BEARING PLATE.**

| Ref. No. | Part Number | Description | No. Req | Net Wt. Lb | Net Wt. Oz |
|---|---|---|---|---|---|
| | WW-83 | **DRIVE HUB** and **HOUSING ASSEMBLY** .. Consisting of the following parts: | | 50 | |
| 620 | BO-169B-2 | **HOUSING** for drive hub (No. 5 S.A.E.).... | 1 | 29 | 8 |
| 621 | NC-149 | **DRIVE HUB**..... | 1 | 18 | |
| 622 | PC-287 | **STUD** for housing to crankcase mounting | 4 | | 2 |
| 623 | PH-278 | **SEAL** for main bearing (National Seal No. 55004) ..... | 1 | | 3 |
| 624 | PH-279 | **RETAINER** for drive hub..... | 1 | | 3 |
| 625 | QD-678 | **CORK SEAL** for drive hub key ..... QD-668, replaced by QD-678. | 1 | | 1 |
| 626 | SD-79-B | **ASSEMBLY NUMBER TAG** ..... | 1 | | 1 |
| 627 | | **NEW DEPARTURE,** No. 7304 pilot bearing (Furnished with clutch)..... | 1 | | 8 |
| | | **STANDARD HARDWARE** | | | |
| 628 | PD-15 | **NUT,** 5/8"-18 thread, hexagon steel ..... For mounting housing to crankcase. PD-145, replaced by PD-15. | 4 | | 1 |
| 629 | PE-4 | **LOCKWASHER,** 5/16" Positive ..... For mounting clutch to drive hub. | 6 | | 1 |
| 630 | PE-5 | **LOCKWASHER,** 3/8" Positive ..... For mounting unit to housing. | 8 | | 1 |
| 631 | PE-37 | **LOCKWASHER,** 5/8" Positive ..... For mounting housing to crankcase. | 4 | | 1 |
| 632 | PE-50 | **LOCKWASHER,** 7/16" countersunk ..... For mounting hub retainer. | 1 | | 1 |
| 633 | PL-122-1 | **KEY,** No. 25 Woodruff..... For mounting drive hub. PL-122, replaced by PL-122-1. | 1 | | 1 |
| 634 | XC-22 | **SCREW,** 7/16"-14 thread x 1-1/4" long, flat head. For mounting hub retainer .... | 1 | | 1 |
| 635 | XD-17 | **SCREW,** 5/16"-18 thread x 1" long, hexagon head ..... For mounting clutch to drive hub. | 6 | | 1 |
| 636 | XD-27 | **SCREW,** 3/8"-16 thread x 1" long, hexagon head ..... For mounting unit to housing. | 8 | | 1 |

Order parts from nearest ***SERVICE STATION*** shown in directory following parts list.
***IMPORTANT:*** Always give Model, Specification and Serial Numbers as shown on name plate.

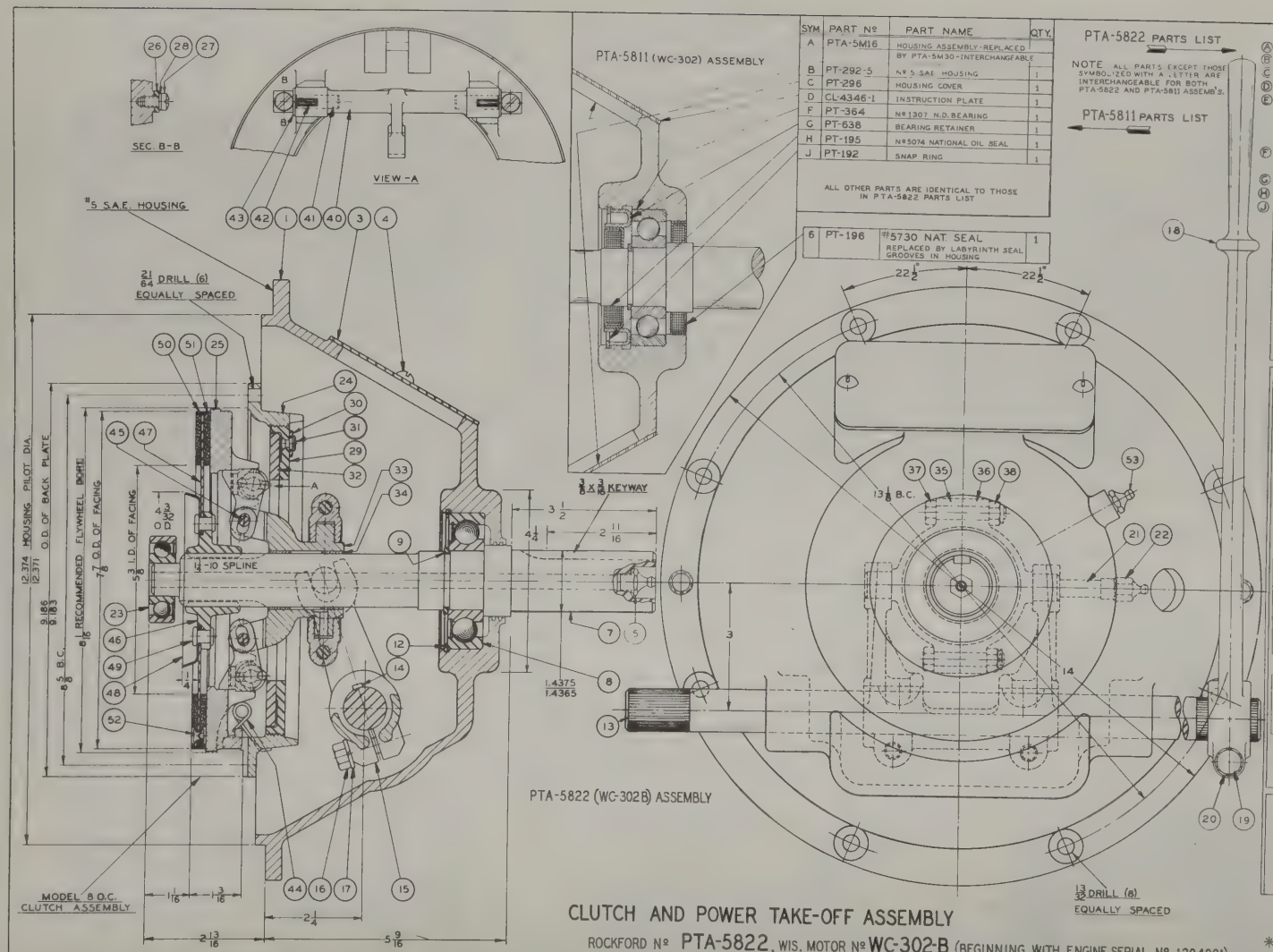


| SYM | PART Nº | PART NAME | QTY. |
|---|---|---|---|
| A | PTA-5M16 | HOUSING ASSEMBLY-REPLACED BY PTA-5M30-INTERCHANGEABLE | |
| B | PT-292-5 | Nº 5 S.A.E. HOUSING | 1 |
| C | PT-296 | HOUSING COVER | 1 |
| D | CL-4346-1 | INSTRUCTION PLATE | 1 |
| F | PT-364 | Nº 1307 N.D. BEARING | 1 |
| G | PT-638 | BEARING RETAINER | 1 |
| H | PT-195 | Nº 5074 NATIONAL OIL SEAL | 1 |
| J | PT-192 | SNAP RING | 1 |

ALL OTHER PARTS ARE IDENTICAL TO THOSE IN PTA-5822 PARTS LIST

| | | | |
|---|---|---|---|
| 6 | PT-196 | #5730 NAT SEAL REPLACED BY LABYRINTH SEAL GROOVES IN HOUSING | 1 |

PTA-5822 PARTS LIST

NOTE ALL PARTS EXCEPT THOSE SYMBOLIZED WITH A LETTER ARE INTERCHANGEABLE FOR BOTH PTA-5822 AND PTA-5811 ASSEMB'S.

PTA-5811 PARTS LIST

| REF. | PART NO. | PART NAME | QTY. |
|---|---|---|---|
| | PTA-5M30 | P. T. UNIT ASSY. | |
| 1 | PT-969 | #5 S.A.E. HOUSING | 1 |
| 3 | PT-897 | INSTRUCTION PLATE | 1 |
| 4 | PT-347 | ROUND HEAD SCR | 2 |
| 5 | PT-360 | #1610 ALEMITE FIT. | 1 |
| 7 | PT-684 | DRIVE SHAFT | 1 |
| 8 | PT-972 | #7307 N. D. BEARING | 1 |
| 9 | PT-191 | SNAP RING | 1 |
| 12 | PT-938 | SNAP RING | 1 |
| 13 | PT-200 | YOKE SHAFT | 1 |
| 14 | PT-351 | #15 WOODRUFF KEY | 2 |
| 15 | PT-199 | CLUTCH YOKE | 1 |
| 16 | PT-352 | HEX. HEAD SCREW | 2 |
| 17 | PT-353 | LOCK WASHER | 2 |
| 18 | PT-769 | SHIFTING LEVER | 1 |
| 19 | PT-604 | HEX. HEAD SCREW | 1 |
| 20 | PT-353 | LOCK WASHER | 1 |
| 21 | PT-639 | PIPE | 1 |
| 22 | PT-355 | #1618 ALEMITE FIT. | 1 |
| 23 | PT-395 | #7304 N. D. BEARING | 1 |
| | CLA-1640-A | CLUTCH ASSEMBLY | |
| | UCLA-60-2346 | COVER ASSEMBLY | |
| 24 | CL-2346 | BACK PLATE | 1 |
| | UCL-2348-1 | PRES. PLATE ASSY. | |
| 25 | CL-2348-1 * | PRESSURE PLATE | 1 |
| 26 | CL-3352 | CAM BLOCK | 4 |
| 27 | CL-3917 | FILLISTER HD. SCR. | 4 |
| 28 | CL-3468 | LOCK WASHER | 4 |
| | UCL-8681-1 | ADJ. RING ASSY. | |
| 29 | CL-8681-1 † | ADJUSTING RING | 1 |
| 30 | CL-3154-1 | ADJUSTMENT LOCK | 1 |
| 31 | CL-3452 | LOCK PIN | 1 |
| 32 | CL-3448 | ADJ. RING PLATE | 1 |
| | UCL-3444-A | SL. & BRG. ASSY. | |
| | UCL-3444 | SLEEVE ASSEMBLY | |
| 33 | CL-3444 * | SLEEVE | 1 |
| 34 | CL-3089 | BUSHING | 2 |
| | UCL-1-3091 | BEARING ASSY. | |
| 35 | CL-3091 * | RELEASE BEARING | 1 |
| 36 | CL-3091-1 † | RELEASE BEARING | 1 |
| 37 | CL-3443-1 | HEX HEAD SCREW | 2 |
| 38 | CL-7356 | ELASTIC STOP NUT | 2 |
| | UCL-4281 | CAM SHAFT ASSY. | |
| 40 | CL-4281 * | CAM SHAFT | 2 |
| 41 | CL-3913 * | ROLLER LARGE | 4 |
| 42 | CL-3914 * | ROLLER SMALL | 8 |
| 43 | CL-4282 * | RETAINER PLATE | 4 |
| 44 | CL-2326-1 | RETURN SPRING | 4 |
| 45 | CL-2355 | LEVER PIN | 2 |
| | CL-487 | COTTER PIN | 2 |
| | CL-4701 | STANDARD WASHER | 2 |
| | UCL-7-1191-3 | DRIVEN MEM. ASSY. | |
| 46 | CL-1191-3 * | SPLINED CENTER | 1 |
| 47 | CL-1093 * | CLUTCH PLATE | 1 |
| 48 | CL-1830 * | OIL DEFLECTOR | 1 |
| 49 | CL-486 * | RIVET | 6 |
| 50 | CL-1418 | FACING | 4 |
| 51 | CL-1419 | FACING | 4 |
| 52 | CL-1011 | TUBULAR RIVET | 16 |
| 53 | PT-668 | 1930 ALEMITE FIT. | 1 |

## CLUTCH AND POWER TAKE-OFF ASSEMBLY

ROCKFORD Nº PTA-5822, WIS. MOTOR Nº WC-302-B (BEGINNING WITH ENGINE SERIAL Nº 1204001)

ROCKFORD Nº PTA-5811, WIS. MOTOR Nº WC-302 (TO AND INCLUDING SERIAL Nº 1204000)

* NOT SERVICED SEPARATELY

# WW-83 CLUTCH DRIVE HUB AND HOUSING ASSEMBLY FOR ROCKFORD CLUTCH REDUCTION UNITS ON VP4D ENGINE

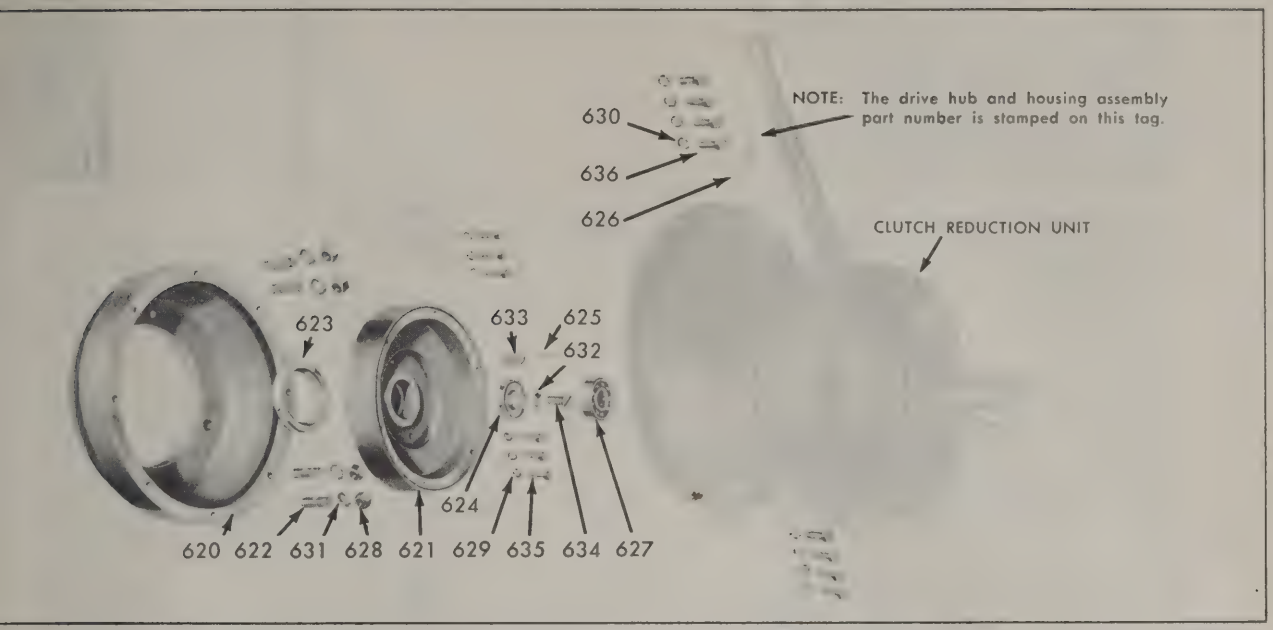


104571C

**The Above Assembly is Suitable for Mounting the Following Clutch Reduction Units**

| Wisconsin Motor Part Number | Rockford Part Number | Reduction Ratio | Rotation at Take-Off Shaft | Net Weight lbs | Net Weight oz | |
|---|---|---|---|---|---|---|
| WC-314 | GRA-586 | 2.05 to 1 | Counter-Enginewise | 80 | | **NOTE:** See Rockford illustration and parts list for Clutch Reduction Unit Parts. |
| WC-315 | GRA-589 | 2.50 to 1 | Counter-Enginewise | 82 | | |
| WC-316 | GRA-584 | 3.90 to 1 | Counter-Enginewise | 85 | | |

**NOTE:** Engines equipped with a Clutch Reduction Unit require a special main bearing plate, crankshaft and crankcase as follows:

**BG-194-1-S1 MAIN BEARING PLATE ASSEMBLY** (not illustrated)
Consisting of:
1 BG-194-1 Bearing Plate
1 PH-278 Oil Seal

**CA-59A-2-S1 CRANKSHAFT ASSEMBLY** (not illustrated) for engines beginning with Serial No. 771501. Consisting of:
1 CA-59A-2 Crankshaft
1 GA-35A-1 Gear
2 ME-98 Bearings
1 PL-49 Key
1 RK-173 Oil Slinger

**CA-59-2-S1** For engines to and including Serial No. 771500.

**THE PART NUMBER OF THE CRANKCASE CAN BE FOUND STAMPED ON THE TAKE-OFF END OF THE CRANKCASE ABOVE THE MAIN BEARING PLATE.**

| Ref. No. | Part Number | Description | No. Req | Net Wt. Lb | Net Wt. Oz |
|---|---|---|---|---|---|
| | WW-83 | **DRIVE HUB** and **HOUSING ASSEMBLY**.. Consisting of the following parts: | | | |
| | BO-169B-2 | **HOUSING** for drive hub (No. 5 S.A.E.).... | 1 | 29 | 8 |
| | NC-149 | **DRIVE HUB**..... | 1 | 18 | |
| | PC-287 | **STUD** for housing to crankcase mounting | 4 | | 2 |
| | PH-278 | **SEAL** for main bearing (National Seal No. 55004) ..... | 1 | | 3 |
| | PH-279 | **RETAINER** for drive hub..... | 1 | | 3 |
| | QD-678 | **CORK SEAL** for drive hub key..... QD-668, replaced by QD-678. | 1 | | 1 |
| | SD-79-B | **ASSEMBLY NUMBER TAG**..... | 1 | | 1 |
| | | **NEW DEPARTURE,** No. 7304 pilot bearing (Furnished with clutch) ..... | 1 | | 8 |
| | | **STANDARD HARDWARE** | | | |
| | PD-15 | **NUT,** 5/8"-18 thread, hexagon steel ..... For mounting housing to crankcase. PD-145, replaced by PD-15. | 4 | | 1 |

| Ref. No. | Part Number | Description | No. Req | Net Wt. Lb | Net Wt. Oz |
|---|---|---|---|---|---|
| 629 | PE-4 | **LOCKWASHER,** 5/16" Positive ..... For mounting clutch to drive hub. | 6 | | 1 |
| 630 | PE-5 | **LOCKWASHER,** 3/8" Positive ..... For mounting unit to housing. | 8 | | 1 |
| 631 | PE-37 | **LOCKWASHER,** 5/8" Positive..... For mounting housing to crankcase. | 4 | | 1 |
| 632 | PE-50 | **LOCKWASHER,** 7/16" countersunk ..... For mounting hub retainer. | 1 | | 1 |
| 633 | PL-122-1 | **KEY,** No. 25 Woodruff ..... For mounting drive hub. PL-122, replaced by PL-122-1. | 1 | | 1 |
| 634 | XC-22 | **SCREW,** 7/16"-14 thread x 1-1/4" long, flat head. For mounting hub retainer..... | 1 | | 1 |
| 635 | XD-17 | **SCREW,** 5/16"-18 thread x 1" long, hexagon head..... For mounting clutch to drive hub. | 6 | | 1 |
| 636 | XD-27 | **SCREW,** 3/8"-16 thread x 1" long, hexagon head..... For mounting unit to housing. | 8 | | 1 |

Order parts from nearest ***SERVICE STATION*** shown in directory following parts list.
***IMPORTANT:*** Always give Model, Specification and Serial Numbers as shown on name plate.

# WC-314 CLUTCH REDUCTION UNIT, ROCKFORD No. GRA-586

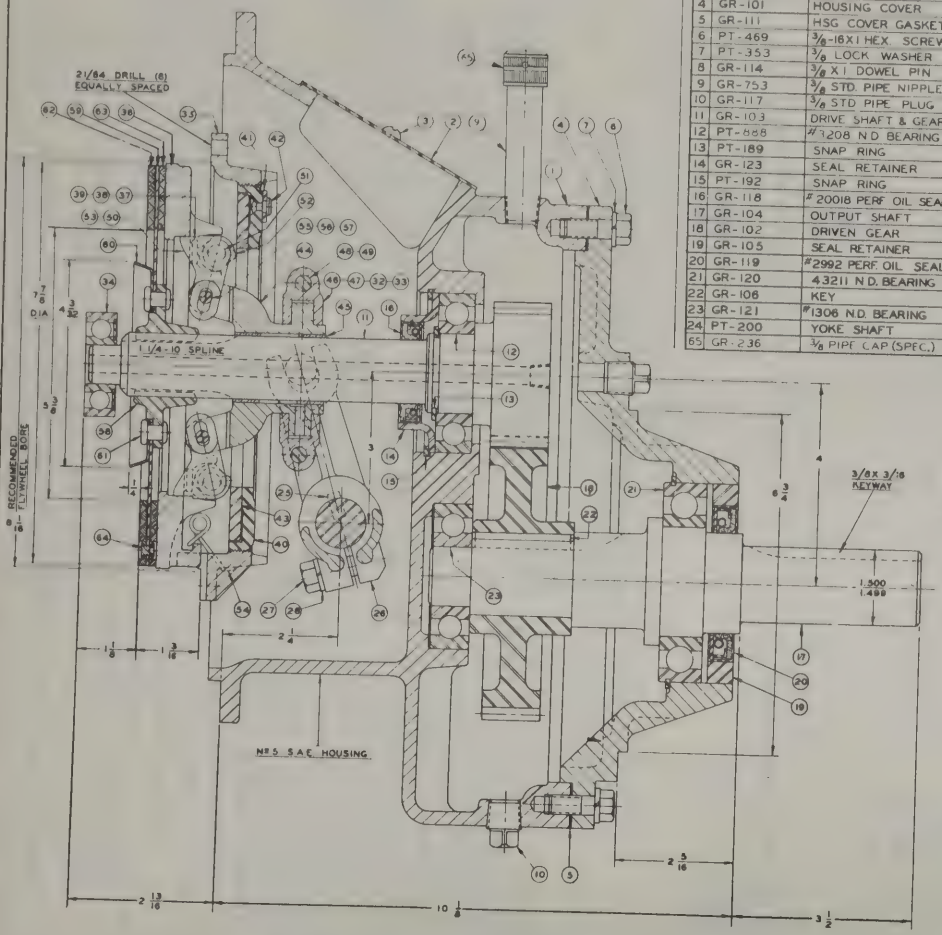


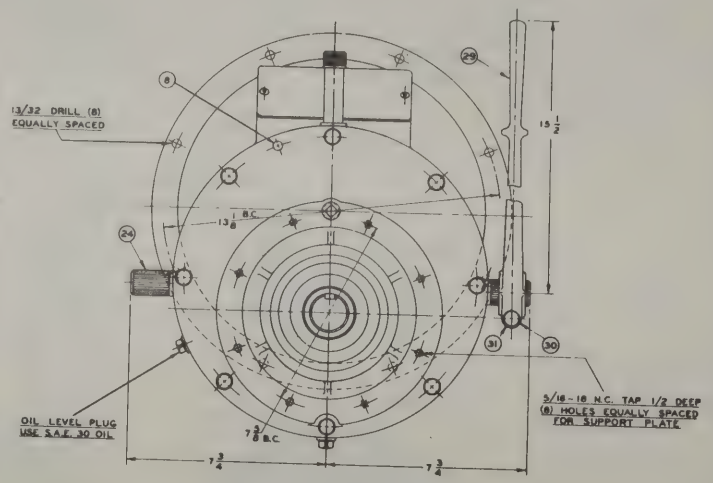


| REF | PART NO | PART NAME | QTY |
|---|---|---|---|
| ← | GRA 5M6 | ASSEMBLY | |
| 1 | GR 100 | #5 S.A.E. HOUSING | 1 |
| 2 | PT 497 | INSTRUCTION PLATE | 1 |
| 3 | PT-347 | 1/4-20 X 3/8 RD HDSCR | 2 |
| 4 | GR-101 | HOUSING COVER | 1 |
| 5 | GR-111 | HSG COVER GASKET | 1 |
| 6 | PT-469 | 3/8-16 X 1 HEX. SCREW | 8 |
| 7 | PT-353 | 3/8 LOCK WASHER | 8 |
| 8 | GR-114 | 3/8 X 1 DOWEL PIN | 1 |
| 9 | GR-753 | 3/8 STD. PIPE NIPPLE | 1 |
| 10 | GR-117 | 3/8 STD PIPE PLUG | 3 |
| 11 | GR-103 | DRIVE SHAFT & GEAR | 1 |
| 12 | PT-888 | #1208 N.D BEARING | 1 |
| 13 | PT-189 | SNAP RING | 1 |
| 14 | GR-123 | SEAL RETAINER | 1 |
| 15 | PT-192 | SNAP RING | 1 |
| 16 | GR-118 | #20018 PERF. OIL SEAL | 1 |
| 17 | GR-104 | OUTPUT SHAFT | 1 |
| 18 | GR-102 | DRIVEN GEAR | 1 |
| 19 | GR-105 | SEAL RETAINER | 1 |
| 20 | GR-119 | #2992 PERF. OIL SEAL | 1 |
| 21 | GR-120 | 4.3211 N.D. BEARING | 1 |
| 22 | GR-106 | KEY | 1 |
| 23 | GR-121 | #1306 N.D. BEARING | 1 |
| 24 | PT-200 | YOKE SHAFT | 1 |
| 65 | GR-236 | 3/8 PIPE CAP (SPEC.) | 1 |

| REF | PART NO | PART NAME | QTY |
|---|---|---|---|
| 25 | PT-351 | #15 WOODRUFF KEY | 2 |
| 26 | PT-199 | CLUTCH YOKE | 1 |
| 27 | PT-352 | 3/8-16 X 1 1/4 HEX SCR | 2 |
| 28 | PT-353 | 3/8 LOCK WASHER | 2 |
| 29 | PT-769 | SHIFTING LEVER | 1 |
| 30 | PT 604 | 3/8-16 X 1 1/2 HEX SCR | 1 |
| 31 | PT-353 | 3/8 LOCK WASHER | 1 |
| 32 | PT-639 | PIPE 1 1/2 LONG | 1 |
| 33 | PT-355 | #1618 ALEMITE FIT | 1 |
| 34 | PT-395 | PILOT BRG (ND #7304) | 1 |
| ← | CLA-1640 A | CLUTCH ASSEMBLY | |
| ← | UCLA-60-2346 | COVER ASSEMBLY | |
| 35 | CL-2346 | BACK PLATE | 1 |
| ← | UCL-2348-1 | PRESSURE PLATE ASSY | |
| 36 | CL-2348-1 | PRESSURE PLATE | 1 |
| 37 | CL-3352 | CAM BLOCK | 4 |
| 38 | CL-3917 | 1/4-20 X 3/8 FIL HD SCR. | 4 |
| 39 | CL-3468 | 1/4 SHAKEPROOF WASH. | 4 |
| ← | UCL-8681-1 | ADJ RING ASSEM | |
| 40 | CL-8681-1 | ADJ RING | 1 |
| 41 | CL-3154-1 | ADJ LOCK | 1 |
| 42 | CL-3452 | LOCK PIN | 1 |
| 43 | CL-3448 | ADJ RING PLATE | 1 |
| ← | UCL-3444-A | SLEEVE & BRG. ASSY | |
| ← | UCL-3444 | SLEEVE ASSEMBLY | |

| REF | PART NO | PART NAME | QTY |
|---|---|---|---|
| 44 | CL-3444 | SLEEVE | 1 |
| 45 | CL-3089 | BUSHING | 2 |
| ← | UCL-1-3091 | BRG. ASSEMBLY | |
| 46 | CL-3091 | RELEASE BEARING | 1 |
| 47 | CL-3091-1 | RELEASE BEARING | 1 |
| 48 | CL-3443-1 | 5/16-24 X 1 5/8 HEX SCR | 2 |
| 49 | CL-7356 | 5/16-24 ELAS. ST NUT | 2 |
| ← | UCL-4281 | CAM SHAFT ASSEM. | |
| 50 | CL-4281 | CAM SHAFT | 2 |
| 51 | CL-3913 | ROLLER (LARGE) | 4 |
| 52 | CL-3914 | ROLLER (SMALL) | 8 |
| 53 | CL-4282 | RETAINER PLATE | 4 |
| 54 | CL-2326-1 | RETURN SPRING | 4 |
| 55 | CL-2355 | LEVER PIN | 2 |
| 56 | CL-487 | 3/32 X 1/2 COT PIN | 2 |
| 57 | CL-4701 | 3/16 STD WASHER | 2 |
| ← | UCL-7-1191-3 | DR MEM ASSEMBLY | |
| 58 | CL-1191-3 | SPLINED CENTER | 1 |
| 59 | CL-1093 | CLUTCH PLATE | 1 |
| 60 | CL-1830 | OIL DEFLECTOR | 1 |
| 61 | CL-486 | RIVET | 6 |
| 62 | CL-1418 | FACING | 4 |
| 63 | CL-1419 | FACING | 4 |
| 64 | CL-1011 | TUBULAR RIVET | 16 |

| RATIO | DRIVING GEAR | DRIVEN GEAR | PITCH |
|---|---|---|---|
| 2.05:1 | 2.625 P.D.-21T | 5.375 P.D.-43T | 8/10 |

ROCKFORD CLUTCH DIVISION
BORG-WARNER CORP.
TITLE GEAR REDUCTION ASSEMBLY
W.B.R. 1/4/47 REV. DATE 5/14/51 PART NO. GRA-586

# WC-315 CLUTCH REDUCTION UNIT, ROCKFORD No. GRA-589

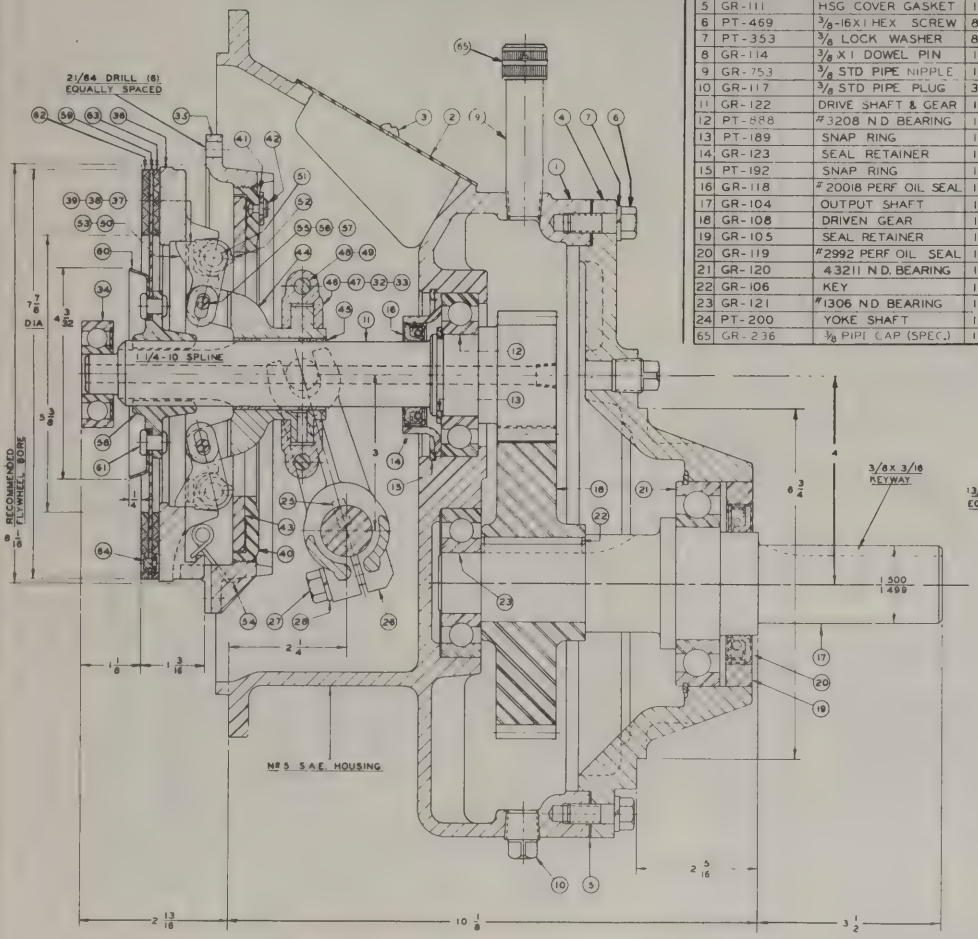


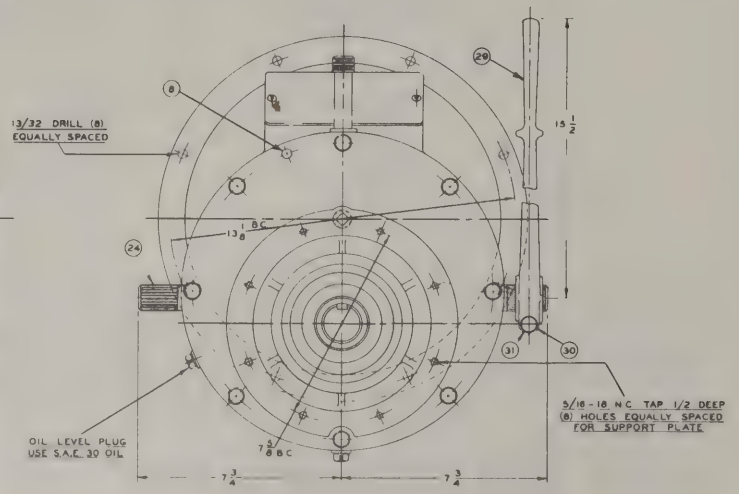


| REF | PART NO | PART NAME | QTY |
|---|---|---|---|
| → | GRA-5M7 | ASSEMBLY | |
| 1 | GR-100 | #5 S.A.E. HOUSING | 1 |
| 2 | PT-897 | INSTRUCTION PLATE | 1 |
| 3 | PT-347 | 1/4-20 X 3/8 RD HDSCR | 2 |
| 4 | GR-101 | HOUSING COVER | 1 |
| 5 | GR-111 | HSG COVER GASKET | 1 |
| 6 | PT-469 | 3/8-16 X 1 HEX SCREW | 8 |
| 7 | PT-353 | 3/8 LOCK WASHER | 8 |
| 8 | GR-114 | 3/8 X 1 DOWEL PIN | 1 |
| 9 | GR-753 | 3/8 STD PIPE NIPPLE | 1 |
| 10 | GR-117 | 3/8 STD PIPE PLUG | 3 |
| 11 | GR-122 | DRIVE SHAFT & GEAR | 1 |
| 12 | PT-888 | #3208 N D BEARING | 1 |
| 13 | PT-189 | SNAP RING | 1 |
| 14 | GR-123 | SEAL RETAINER | 1 |
| 15 | PT-192 | SNAP RING | 1 |
| 16 | GR-118 | #20018 PERF OIL SEAL | 1 |
| 17 | GR-104 | OUTPUT SHAFT | 1 |
| 18 | GR-108 | DRIVEN GEAR | 1 |
| 19 | GR-105 | SEAL RETAINER | 1 |
| 20 | GR-119 | #2992 PERF OIL SEAL | 1 |
| 21 | GR-120 | 43211 N.D. BEARING | 1 |
| 22 | GR-106 | KEY | 1 |
| 23 | GR-121 | #1306 ND BEARING | 1 |
| 24 | PT-200 | YOKE SHAFT | 1 |
| 65 | GR-236 | 3/8 PIPE CAP (SPEC.) | 1 |

| REF | PART NO | PART NAME | QTY |
|---|---|---|---|
| 25 | PT-351 | #15 WOODRUFF KEY | 2 |
| 26 | PT-199 | CLUTCH YOKE | 1 |
| 27 | PT-352 | 3/8-16 X 1 1/4 HEX SCR | 2 |
| 28 | PT-353 | 3/8 LOCK WASHER | 2 |
| 29 | PT-769 | SHIFTING LEVER | 1 |
| 30 | PT-604 | 3/8-16 X 1 1/2 HEX SCR | 1 |
| 31 | PT-353 | 3/8 LOCK WASHER | 1 |
| 32 | PT-639 | PIPE 1 1/2 LONG | 1 |
| 33 | PT-355 | #1618 ALEMITE FIT. | 1 |
| 34 | PT-395 | PILOT BRG (ND#7304) | 1 |
| → | CLA-1640 A | CLUTCH ASSEMBLY | |
| → | UCLA 60-2346 | COVER ASSEMBLY | |
| 35 | CL-2346 | BACK PLATE | 1 |
| → | UCL-2348-1 | PRESSURE PLATE ASSY | |
| 36 | CL-2348-1 | PRESSURE PLATE | 1 |
| 37 | CL-3352 | CAM BLOCK | 4 |
| 38 | CL-3917 | 1/4-20 X 3/8 FIL HD SCR | 4 |
| 39 | CL-3468 | 1/4 SHAKEPROOF WASH. | 4 |
| → | UCL-8681-1 | ADJ RING ASSEM | |
| 40 | CL-8681-1 | ADJ RING | 1 |
| 41 | CL-3154-1 | ADJ LOCK | 1 |
| 42 | CL-3452 | LOCK PIN | 1 |
| 43 | CL-3448 | ADJ RING PLATE | 1 |
| → | UCL-3444-A | SLEEVE & BRG. ASSY | |
| → | UCL-3444 | SLEEVE ASSEMBLY | |

| REF | PART NO | PART NAME | QTY |
|---|---|---|---|
| 44 | CL-3444 | SLEEVE | 1 |
| 45 | CL-3089 | BUSHING | 2 |
| → | UCL-1-3091 | BRG ASSEMBLY | |
| 46 | CL-3091 | RELEASE BEARING | 1 |
| 47 | CL-3091-1 | RELEASE BEARING | 1 |
| 48 | CL-3443-1 | 5/16-24 X 1 5/8 HEX SCR | 2 |
| 49 | CL-7356 | 5/16-24 ELAS ST NUT | 2 |
| → | UCL-4281 | CAM SHAFT ASSEM. | |
| 50 | CL-4281 | CAM SHAFT | 2 |
| 51 | CL-3913 | ROLLER (LARGE) | 4 |
| 52 | CL-3914 | ROLLER (SMALL) | 8 |
| 53 | CL-4282 | RETAINER PLATE | 4 |
| 54 | CL-2326-1 | RETURN SPRING | 4 |
| 55 | CL-2355 | LEVER PIN | 2 |
| 56 | CL-487 | 3/32 X 1/2 COT PIN | 2 |
| 57 | CL-4701 | 3/16 STD WASHER | 2 |
| → | UCL-7-1191-3 | DR MEM ASSEMBLY | |
| 58 | CL-1191-3 | SPLINED CENTER | 1 |
| 59 | CL-1093 | CLUTCH PLATE | 1 |
| 60 | CL-1830 | OIL DEFLECTOR | 1 |
| 61 | CL-486 | RIVET | 6 |
| 62 | CL-1418 | FACING | 4 |
| 63 | CL-1419 | FACING | 4 |
| 64 | CL-1011 | TUBULAR RIVET | 16 |

| RATIO | DRIVING GEAR | DRIVEN GEAR | PITCH |
|---|---|---|---|
| 2.5:1 | 2.250 P.D.-18 T | 5.750 P.D.-46 T | 8/10 |

ROCKFORD CLUTCH DIVISION
GEAR REDUCTION ASSEMBLY
W.H.R. 1/4/47 GRA-589

# WC-316 CLUTCH REDUCTION UNIT, ROCKFORD No. GRA-584

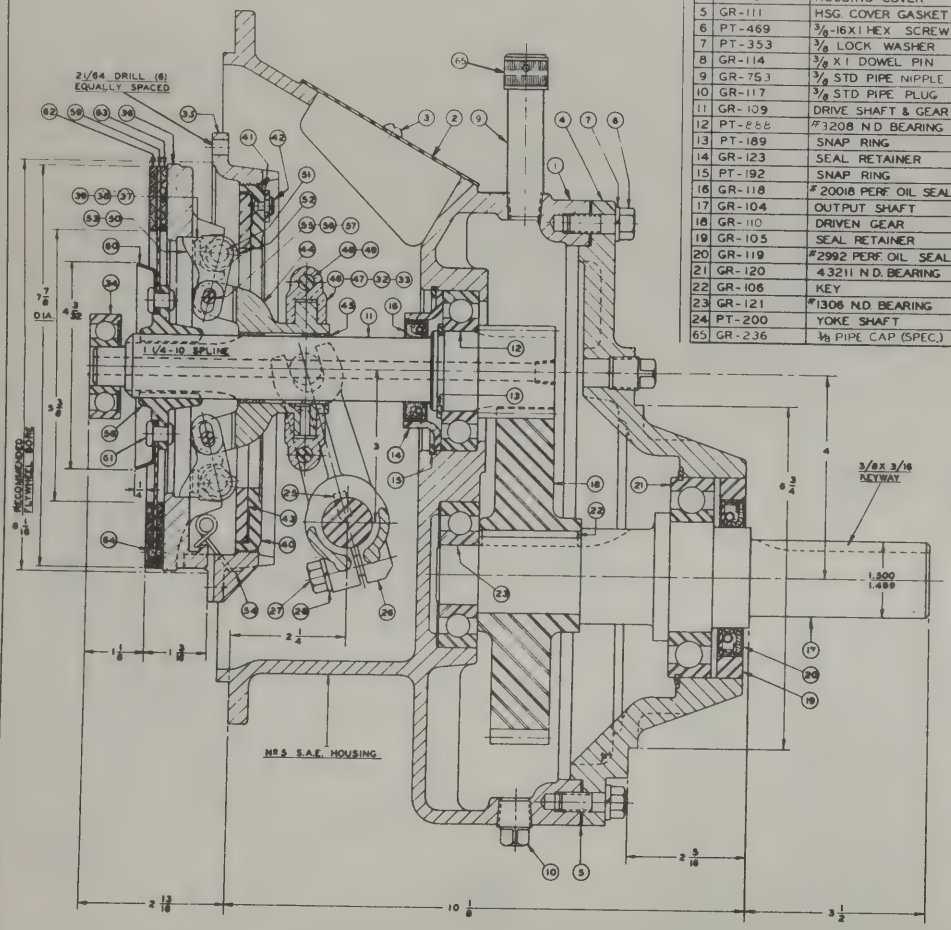


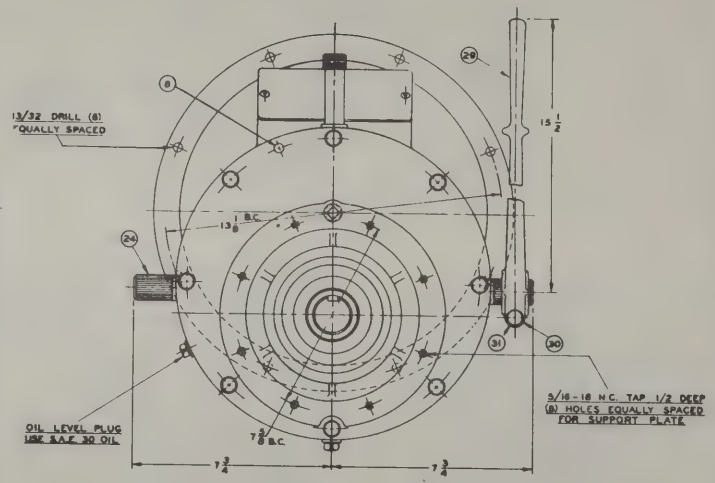


| REF | PART NO | PART NAME | QTY |
|---|---|---|---|
| ← | GRA-5M4 | ASSEMBLY | |
| 1 | GR-100 | #5 S.A.E. HOUSING | 1 |
| 2 | FT-597 | INSTRUCTION PLATE | 1 |
| 3 | PT-347 | 1/4-20 X 3/8 RD. HDSCR | 2 |
| 4 | GR-101 | HOUSING COVER | 1 |
| 5 | GR-111 | HSG. COVER GASKET | 1 |
| 6 | PT-469 | 3/8-16 X 1 HEX SCREW | 8 |
| 7 | PT-353 | 3/8 LOCK WASHER | 8 |
| 8 | GR-114 | 3/8 X 1 DOWEL PIN | 1 |
| 9 | GR-753 | 3/8 STD PIPE NIPPLE | 1 |
| 10 | GR-117 | 3/8 STD PIPE PLUG | 3 |
| 11 | GR-109 | DRIVE SHAFT & GEAR | 1 |
| 12 | PT-888 | #3208 N.D. BEARING | 1 |
| 13 | PT-189 | SNAP RING | 1 |
| 14 | GR-123 | SEAL RETAINER | 1 |
| 15 | PT-192 | SNAP RING | 1 |
| 16 | GR-118 | #20018 PERF. OIL SEAL | 1 |
| 17 | GR-104 | OUTPUT SHAFT | 1 |
| 18 | GR-110 | DRIVEN GEAR | 1 |
| 19 | GR-105 | SEAL RETAINER | 1 |
| 20 | GR-119 | #2992 PERF. OIL SEAL | 1 |
| 21 | GR-120 | 43211 N.D. BEARING | 1 |
| 22 | GR-106 | KEY | 1 |
| 23 | GR-121 | #1306 N.D. BEARING | 1 |
| 24 | PT-200 | YOKE SHAFT | 1 |
| 65 | GR-236 | 1/8 PIPE CAP (SPEC.) | 1 |

| REF | PART NO | PART NAME | QTY |
|---|---|---|---|
| 25 | PT-351 | #15 WOODRUFF KEY | 2 |
| 26 | PT-199 | CLUTCH YOKE | 1 |
| 27 | PT-352 | 3/8-16 X 1 1/4 HEX SCR | 2 |
| 28 | PT-353 | 3/8 LOCK WASHER | 2 |
| 29 | PT-769 | SHIFTING LEVER | 1 |
| 30 | PT-604 | 3/8-16 X 1 1/2 HEX SCR | 1 |
| 31 | PT-353 | 3/8 LOCK WASHER | 1 |
| 32 | PT-639 | PIPE 1 1/2 LONG | 1 |
| 33 | PT-355 | #1618 ALEMITE FIT. | 1 |
| 34 | PT-395 | PILOT BRG. (ND#7304) | 1 |
| ← | CLA-1640-A | CLUTCH ASSEMBLY | |
| ← | UCLA-60-2346 | COVER ASSEMBLY | |
| 35 | CL-2346 | BACK PLATE | 1 |
| ← | UCL-2348-1 | PRESSURE PLATE ASSY | |
| 36 | CL-2348-1 | PRESSURE PLATE | 1 |
| 37 | CL-3352 | CAM BLOCK | 4 |
| 38 | CL-3917 | 1/4-20 X 3/8 FIL. HD. SCR. | 4 |
| 39 | CL-3468 | 1/4 SHAKEPROOF WASH. | 4 |
| ← | UCL-8681-1 | ADJ. RING ASSEM | |
| 40 | CL-8681-1 | ADJ. RING | 1 |
| 41 | CL-3154-1 | ADJ. LOCK | 1 |
| 42 | CL-3452 | LOCK PIN | 1 |
| 43 | CL-3448 | ADJ. RING PLATE | 1 |
| ← | UCL-3444-A | SLEEVE & BRG. ASSY. | |
| ← | UCL-3444 | SLEEVE ASSEMBLY | |

| REF | PART NO | PART NAME | QTY |
|---|---|---|---|
| 44 | CL-3444 | SLEEVE | 1 |
| 45 | CL-3089 | BUSHING | 2 |
| ← | UCL-1-3091 | BRG. ASSEMBLY | |
| 46 | CL-3091 | RELEASE BEARING | 1 |
| 47 | CL-3091-1 | RELEASE BEARING | 1 |
| 48 | CL-3443-1 | 5/16-24 X 1 5/8 HEX SCR | 2 |
| 49 | CL-7356 | 5/16-24 ELAS. ST NUT | 2 |
| ← | UCL-4281 | CAM SHAFT ASSEM. | |
| 50 | CL-4281 | CAM SHAFT | 2 |
| 51 | CL-3913 | ROLLER (LARGE) | 4 |
| 52 | CL-3914 | ROLLER (SMALL) | 8 |
| 53 | CL-4282 | RETAINER PLATE | 4 |
| 54 | CL-2326-1 | RETURN SPRING | 4 |
| 55 | CL-2355 | LEVER PIN | 2 |
| 56 | CL-487 | 3/32 X 1/2 COT. PIN | 2 |
| 57 | CL-4701 | 3/16 STD. WASHER | 2 |
| ← | UCL-7-1191-3 | DR. MEM. ASSEMBLY | |
| 58 | CL-1191-3 | SPLINED CENTER | 1 |
| 59 | CL-1093 | CLUTCH PLATE | 1 |
| 60 | CL-1830 | OIL DEFLECTOR | 1 |
| 61 | CL-486 | RIVET | 6 |
| 62 | CL-1418 | FACING | 4 |
| 63 | CL-1419 | FACING | 4 |
| 64 | CL-1011 | TUBULAR RIVET | 16 |

| RATIO | DRIVING GEAR | DRIVEN GEAR | PITCH |
|---|---|---|---|
| 3.9:1 | 1,625 P.D.-13 T | 6,375 P.D.-51 T | 8/10 |

| | | |
|---|---|---|
| ROCKFORD CLUTCH DIVISION | | |
| PART NAME: GEAR REDUCTION ASSEMBLY | | |
| DRAWN: G.H.S. | DATE: 1/4/47 | PART NO: GRA-584 |
| CHECKED: | DATE: 5/14/57 | |

# WW-80 DRIVE HUB AND HOUSING ASSEMBLY
# FOR TWIN DISC CLUTCH REDUCTION UNITS ON VP4D ENGINE

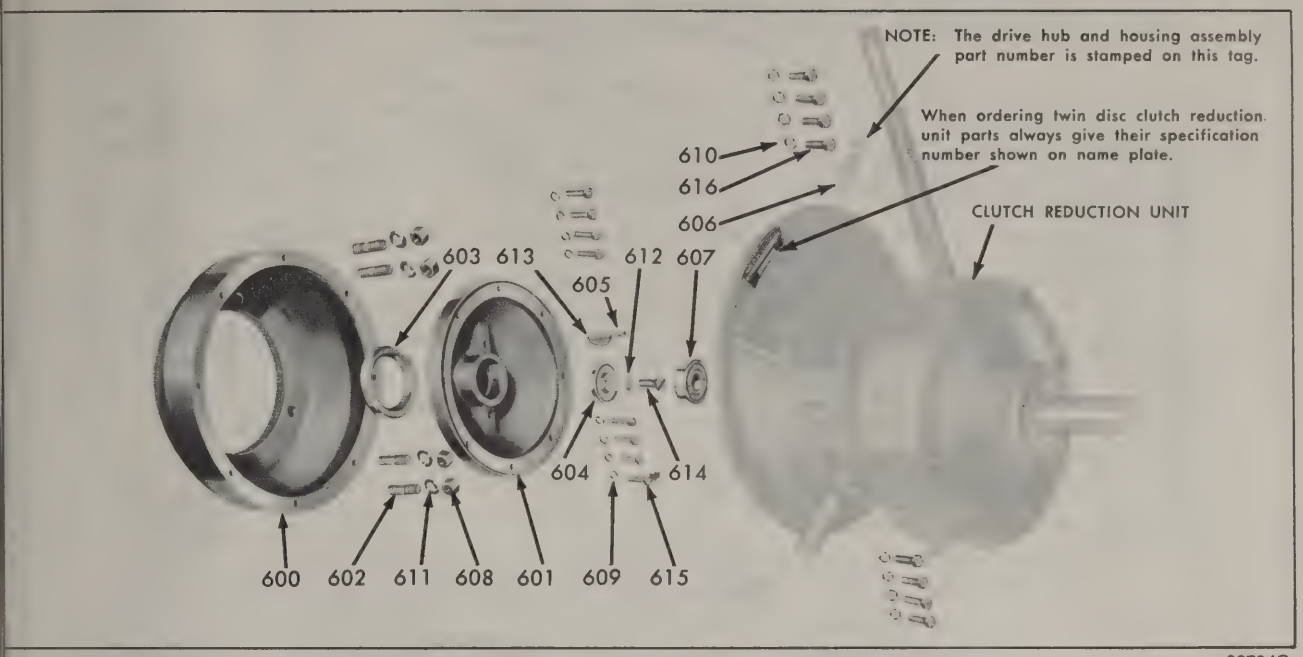


99784C

**The Above Assembly is Suitable for Mounting the Following Clutch Reduction Units**

| Wisconsin Motor Part Number | Twin Disc C-7-1/2, Model | Twin Disc Drawing No. | Reduction Ratio | Rotation at Take-Off Shaft | Net Weight lbs | Net Weight oz |
|---|---|---|---|---|---|---|
| WC-249-1 | C 107E2RG5 | X 8515 | 2.56 to 1 | Engine-wise | 89 | |
| WC-250-1 | C 107E3RG5 | X 8515 | 3.60 to 1 | Engine-wise | 90 | |
| WC-251-1 | C 107E5RG5 | X 8516 | 4.90 to 1 | Engine-wise | 92 | |
| WC-252-1 | C 107A2RG5 | X 8518 | 2.50 to 1 | Counter-enginewise | 83 | |
| WC-253-1 | C 107A4RG5 | X 8518 | 3.90 to 1 | Counter-enginewise | 85 | |

**NOTE:** See Twin Disc illustration and parts list for clutch reduction unit parts. Always give their specification, number shown on name plate, when ordering parts.

**NOTE:** Engines equipped with a Clutch Reduction Unit require a special main bearing plate, crankshaft and crankcase as follows:

**BG-194-1-S1 MAIN BEARING PLATE ASSEMBLY** (not illustrated)
Consisting of:
1 BG-194-1 Bearing Plate
1 PH-278 Oil Seal

**CA-59A-2-S1 CRANKSHAFT ASSEMBLY** (not illustrated) for engines beginning with Serial No. 771501. Consisting of:
1 CA-59A-2 Crankshaft
1 GA-35A-1 Gear
2 ME-98 Bearings
1 PL-49 Key
1 RK-173 Oil Slinger

**CA-59-2-S1** For engines to and including Serial No. 771500.

**THE PART NUMBER OF THE CRANKCASE CAN BE FOUND STAMPED ON THE TAKE-OFF END OF THE CRANKCASE ABOVE THE MAIN BEARING PLATE.**

| Ref. No. | Part Number | Description | No. Req | Net Wt. Lb | Net Wt. Oz |
|---|---|---|---|---|---|
| | WW-80 | **DRIVE HUB** and **HOUSING ASSEMBLY**.. Consisting of the following parts: | | | |
| 600 | BO-169-B-2 | **HOUSING** for drive hub (No. 5 S.A.E.).... | 1 | 29 | 8 |
| 601 | NC-135A-1 | **DRIVE HUB**..... | 1 | 13 | |
| 602 | PC-287 | **STUD** for housing to crankcase mounting | 4 | | 2 |
| 603 | PH-278 | **SEAL** for main bearing (National Seal No. 55004)..... | 1 | | 3 |
| 604 | PH-279 | **RETAINER** for drive hub..... | 1 | | 3 |
| 605 | QD-678 | **CORK SEAL** for drive hub key ..... QD-668, replaced by QD-678. | 1 | | 1 |
| 606 | SD-79-B | **ASSEMBLY NUMBER TAG**..... | 1 | | 1 |
| 607 | | **Strom** No. 205F pilot bearing..... (Furnished with clutch). | 1 | | 8 |
| | | **STANDARD HARDWARE** | | | |
| 608 | PD-15 | **NUT,** 5/8"-18 thread, hexagon steel ..... For mounting housing to crankcase. PD-145, replaced by PD-15. | 4 | | 1 |
| 609 | PE-4 | **LOCKWASHER,** 5/16" Positive ..... For mounting clutch to drive hub. | 8 | | 1 |
| 610 | PE-5 | **LOCKWASHER,** 3/8" Positive ..... For mounting unit to housing. | 8 | | 1 |
| 611 | PE-37 | **LOCKWASHER,** 5/8" Positive ..... For mounting housing to crankcase. | 4 | | 1 |
| 612 | PE-50 | **LOCKWASHER,** 1/16" countersunk ..... For mounting hub retainer. | 1 | | 1 |
| 613 | PL-122-1 | **KEY,** No. 25 Woodruff..... For mounting drive hub. PL-122, replaced by PL-122-1. | 1 | | 1 |
| 614 | XC-22 | **SCREW,** 7/16"-14 thread x 1-1/4" long, flat head. For mounting hub retainer .... | 1 | | 1 |
| 615 | XD-19 | **SCREW,** 5/16"-18 thread x 1-1/4" long, hexagon head..... For mounting clutch to drive hub. | 8 | | 1 |
| 616 | XD-27 | **SCREW,** 3/8"-16 thread x 1" long, hexagon head..... For mounting unit to housing. | 8 | | 1 |

Order parts from nearest ***SERVICE STATION*** shown in directory following parts list.
***IMPORTANT:*** Always give Model, Specification and Serial Numbers as shown on name plate.

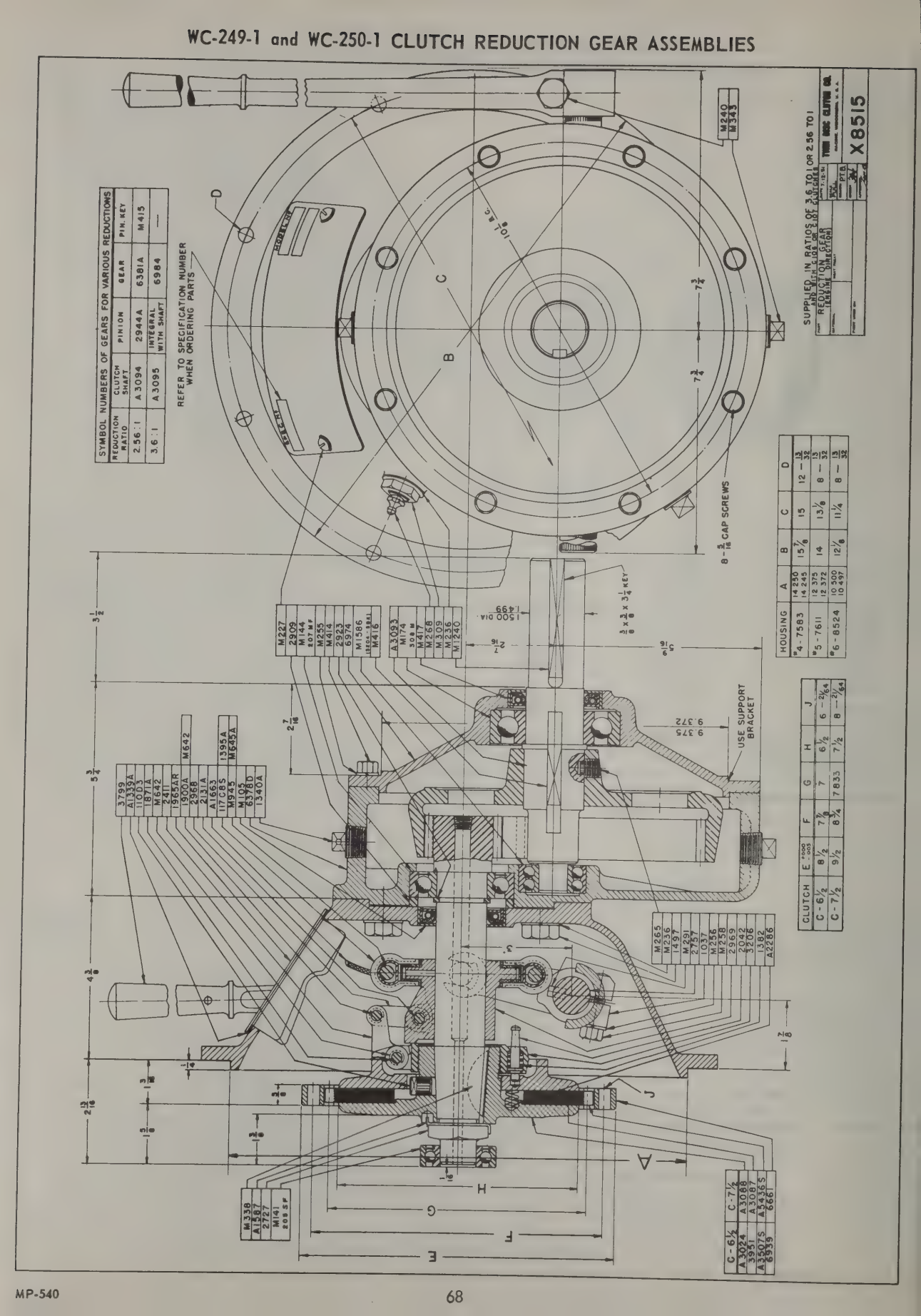
SYMBOL NUMBERS OF GEARS FOR VARIOUS REDUCTIONS
REDUCTION RATIO | CLUTCH SHAFT | PINION | GEAR | PIN. KEY
2.56 : 1 | A3094 | 2944A | 6381A | M415
3.6 : 1 | A3095 | INTEGRAL WITH SHAFT | 6984 | —
REFER TO SPECIFICATION NUMBER WHEN ORDERING PARTS
SUPPLIED IN RATIOS OF 3.6 TO 1 OR 2.56 TO 1 AND WITH C OR G CLUTCH
REDUCTION GEAR (REAR MOUNTING)
THE BORG CLUTCH CO.
X8515
8 - 5/16 CAP SCREWS
USE SUPPORT BRACKET
HOUSING | A | B | C | D
#4 - 7583 | 14 230 / 14 245 | 15 7/8 | 15 | 12 — 13/32
#5 - 7611 | 12 375 / 12 372 | 14 | 13 1/8 | 8 — 13/32
#6 - 8524 | 10 500 / 10 497 | 12 1/8 | 11 1/4 | 8 — 13/32
CLUTCH | E | F | G | H | J
C - 6 1/2 | 8 1/2 | 7 7/8 | 7 | 6 1/2 | 6 - 2/64
C - 7 1/2 | 9 1/2 | 8 3/4 | 7 833 | 7 1/2 | 8 - 2/64
M338 A1587 2727 M141 208 SP
C - 6 1/2 A3024 3951 A3507S 6939
C - 7 1/2 A3088 A3087 A4365 6661
3799 A1339A A1033 1871A M642 2411 1965AR 1900A 2968 2131A A1663 117 C85 M945 M195 6318D 1340A
M642 1395A M645A
M227 2909 M144 2079 MF M425 M434 2923 6974 M1586 (REG. 3.6:1) M416
A3093 M174 308 M M427 M428 M309 M236 M1240
M265 M236 1497 M291 2757 1037 M256 M258 2969 2042 3206 1302 A2286
M240 M343
1.500 DIA 1.499
3/8 x 3/8 x 3 1/4 KEY
9.375
9.372
A
B
C
D
E
F
G
H
J

# WC-249-1 and WC-250-1 CLUTCH REDUCTION GEAR ASSEMBLIES

## TWIN DISC CLUTCH COMPANY
RACINE, WISCONSIN

Repair Parts List for

| Wis. Motor No. | Twin Disc No. |
|---|---|
| WC-249-1 | X8515 Model C107E2.5RG5 Clutch reduction gear, Spec. 15356 |
| WC-250-1 | X8515 Model C107E3RG5 Clutch reduction gear, Spec. 15619 |

All parts are interchangeable on the above Twin Disc clutch reduction gears unless otherwise specified.

| Twin Disc Part Number | Description | No. Req. |
|---|---|---|
| C-107 | CLUTCH ASSEMBLY per Spec. 15270 | 1 |
| | Consisting of: | |
| H-18 | HUB and BACK PLATE ASSEMBLY | 1 |
| | Consisting of: | |
| | 1 A3088 Hub and back plate | |
| | 1 110D3 Plate pin | |
| A-16 | ADJUSTING YOKE ASSEMBLY | 1 |
| | Consisting of: | |
| | 1 3206 Adjusting yoke | |
| | 4 2411 Fingers | |
| | 4 1871A Finger pins | |
| | 1 2042 Adjusting lock pin | |
| | 1 1382 Adjusting lock pin spring | |
| | 4 M642 Snap rings | |
| S-387 | SLIDING SLEEVE ASSEMBLY | 1 |
| | Consisting of: | |
| | 1 2969 Sliding sleeve, Bore 1.381 — 1.379 | |
| | 8 2968 Lever links | |
| | 4 2131A Link pins | |
| | 8 M642 Snap rings | |
| | 4 1900A Lever link pins | |
| | 117C8S 1 CONE COLLAR ASSEMBLY | |
| | Consisting of: | |
| | 2 M945 Hexagon head capscrews | |
| | 2 M645A Elastic stop nuts | |
| | 4 1395A Washers | |
| A5436S | DRIVING PLATE (3 segments) | 1 |
| A2286 | RELEASE SPRING | 6 |
| A3087 | FLOATING PLATE | 1 |
| | MISCELLANEOUS CLUTCH AND REDUCTION UNIT PARTS | |
| A1339 | GASKET | 1 |
| A1587 | LOCKWASHER | 1 |
| A1663 | FLEXIBLE HOSE ASSEMBLY | 1 |
| A3093 | GEAR SHAFT | 1 |
| A3094 | CLUTCH SHAFT (for WC-249-1 only) 2.56:1 reduction | 1 |
| A3095 | CLUTCH SHAFT and PINION (for WC-250-1 only) 3.6:1 reduction | 1 |
| M102 | OIL CUP (1/4) | 2 |
| M105 | OIL SEAL (National 50055-2) | 1 |
| M141 | BALL BEARING (MRC 205-SF) | 1 |
| M144 | BALL BEARING (MRC 207-MF) | 1 |
| M174 | BALL BEARING (MRC 308-M) | 1 |
| M227 | ROUND HEAD SCREW (1/4-20 NC x 1/2) | 2 |

| Twin Disc Part Number | Description | No. Req. |
|---|---|---|
| M236 | INTERNAL LOCKWASHER (5/8) | 5 |
| M240 | HEXAGON HEAD CAPSCREW (1/2-13 NC x 1-3/4) | 1 |
| M241 | INTERNAL LOCKWASHER (1/2) | 1 |
| M255 | INTERNAL LOCKWASHER (5/16) | 8 |
| M256 | INTERNAL LOCKWASHER (3/8) | 2 |
| M258 | HEXAGON HEAD CAPSCREW (3/8-16 NC x 1-1/2) | 2 |
| M265 | HALF DOG POINT SET SCREW (1/2-13 NC x 5/8) | 1 |
| M268 | MALE HYDRAULIC FITTING (1/8 N P T x 11/16) | 1 |
| M291 | WOODRUFF KEY (No. 15) | 2 |
| M309 | LIGHT JAM NUT (5/8-18 NF x 3/8) | 1 |
| M338 | WOODRUFF KEY (No. 27) | 1 |
| M343 | SQUARE HEAD PIPE PLUG (1/2) | 2 |
| M414 | HEXAGON HEAD CAPSCREW (5/16-18 NC x 7/8) | 8 |
| M415 | STRAIGHT SQUARE KEY (5/16 x 5/16 x 1-1/8) on WC-249-1 only | 1 |
| M416 | STRAIGHT SQUARE KEY (3/8 x 3/8 x 1-5/8) on WC-249-1 only | 1 |
| M417 | OIL SEAL (National 50185-2) | 1 |
| M600 | STRAIGHT SQUARE KEY (3/8 x 3/8 x 1-1/2) on WC-250-1 only | 1 |
| M1240 | STRAIGHT SQUARE KEY (3/8 x 3/8 x 3-1/4) | 1 |
| M1586 | BALL BEARING (5204 SBK) | 1 |
| 1037 | THROWOUT YOKE | 1 |
| 1340A | PIPE PLUG | 1 |
| 1497 | CAPSCREW | 4 |
| 1965R | INSTRUCTION COVER PLATE | 1 |
| 2727 | NUT for hub | 1 |
| 2757 | OPERATING SHAFT | 1 |
| 2909 | SPACER | 1 |
| 2923 | SNAP RING | 1 |
| 2943 | SPACER (on WC-249-1 only) | 1 |
| 2944A | PINION (on WC-249-1 only) 2.56:1 reduction | 1 |
| 3799 | HAND LEVER | 1 |
| 6378D | GEAR HOUSING | 1 |
| 6381A | INTERNAL GEAR (on WC-249-1 only) 2.56:1 red. | 1 |
| 6661 | DRIVING RING | 1 |
| 6974 | COVER PLATE | 1 |
| 6984 | INTERNAL GEAR (on WC-250-1 only) 3.6:1 red. | 1 |
| 7611 | No. 5 S.A.E. CLUTCH HOUSING | 1 |

When ordering parts kindly advise the Twin Disc Specification Number.

# WC-251-1 CLUTCH REDUCTION GEAR ASSEMBLY

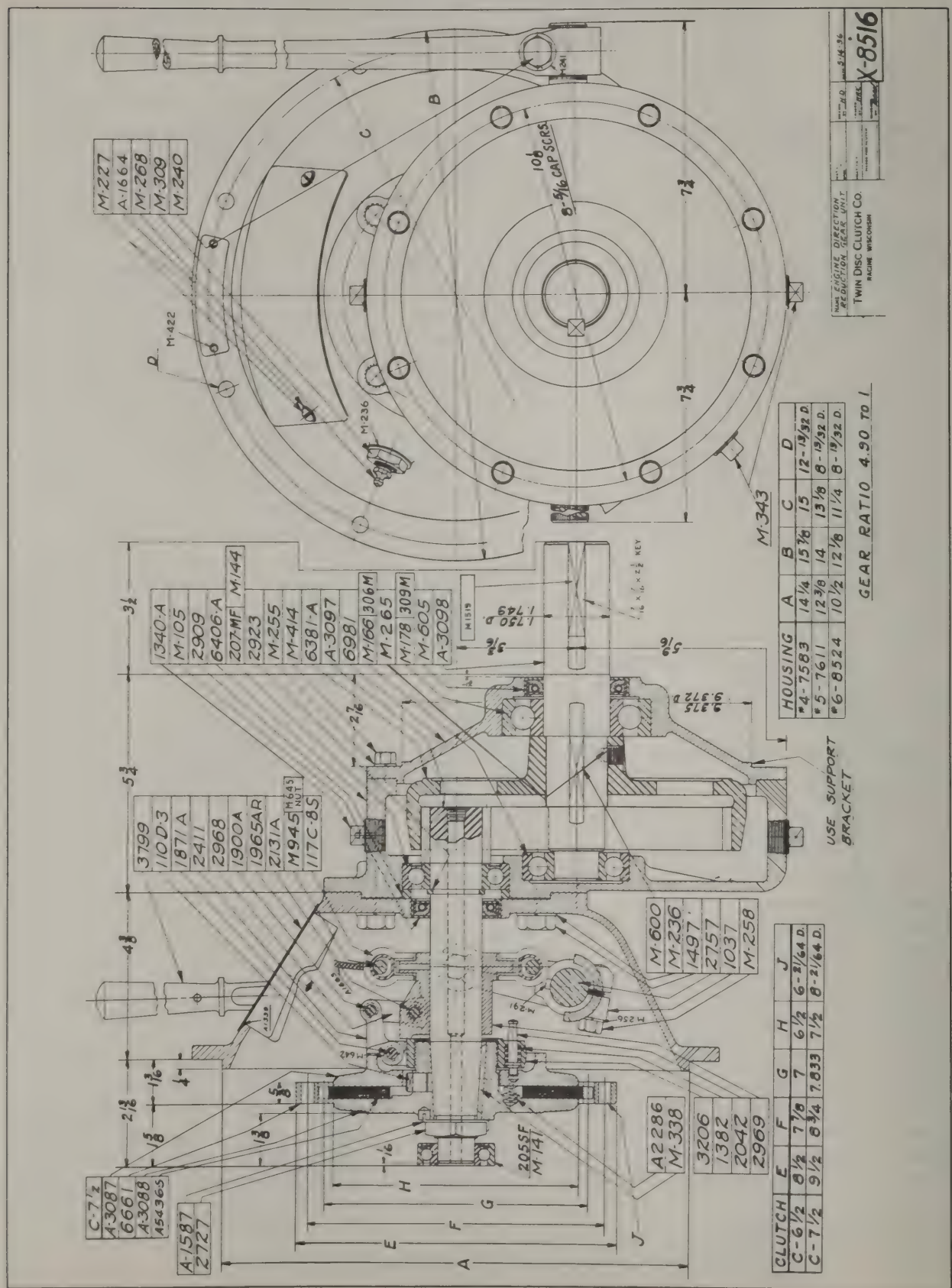

# WC-251-1 CLUTCH REDUCTION GEAR ASSEMBLY

## TWIN DISC CLUTCH COMPANY
RACINE, WISCONSIN

**Repair Parts List for**

| Wis. Motor No. | Twin Disc No. |
|---|---|
| WC-251-1 | X8516 Model C107E5RG5 Clutch reduction gear, Spec. 15759 |

| Twin Disc Part Number | Description | No. Req. |
|---|---|---|
| C-107 | CLUTCH ASSEMBLY per Spec. 15270 | 1 |
| | Consisting of: | |
| H-18 | HUB and BACK PLATE ASSEMBLY | 1 |
| | Consisting of: | |
| | 1 A3088 Hub and back plate | |
| | 1 110D3 Plate pin | |
| A-16 | ADJUSTING YOKE ASSEMBLY | 1 |
| | Consisting of: | |
| | 1 3206 Adjusting yoke | |
| | 4 2411 Fingers | |
| | 4 1871A Finger pins | |
| | 1 2042 Adjusting lock pin | |
| | 1 1382 Adjusting lock pin spring | |
| | 4 M642 Snap rings (5/16 x 1/2 x 3/64) | |
| S-387 | SLIDING SLEEVE ASSEMBLY | 1 |
| | Consisting of: | |
| | 1 2969 Sliding sleeve, Bore 1.381 – 1.379 | |
| | 8 2968 Lever links | |
| | 4 2131A Link pins | |
| | 8 M642 Snap rings (5/16 x 1/2 x 3/64) | |
| | 4 1900A Lever link pins | |
| | 117C8S 1 CONE COLLAR ASSEMBLY | |
| | Consisting of: | |
| | 2 M945 Hexagon head capscrews | |
| | 2 M645A Elastic stop nuts | |
| | 4 1395A Washers | |
| A54365 | DRIVING PLATE (3 segments) | 1 |
| A2286 | RELEASE SPRING | 6 |
| A3087 | FLOATING PLATE | 1 |
| | MISCELLANEOUS CLUTCH AND REDUCTION UNIT PARTS | |
| A1339 | GASKET | 1 |
| A1587 | LOCKWASHER | 1 |
| A1663 | FLEXIBLE HOSE ASSEMBLY | 1 |
| A1664 | SPECIFICATION PLATE | 1 |
| A3097 | CLUTCH SHAFT and PINION | 1 |
| A3098 | GEAR SHAFT | 1 |
| M101 | LOCKWASHERS (1/4 x 3/32 x 1/16) | 2 |
| M102 | OIL CUP (1/4) | 2 |
| M105 | OIL SEAL | 1 |
| M141 | BALL BEARING (MRC205-SF) | 1 |
| M144 | BALL BEARING (MRC207-MF) | 1 |
| M166 | BALL BEARING (MRC306-M) | 1 |
| M178 | BALL BEARING (MRC309-M) | 1 |

| Twin Disc Part Number | Description | No. Req. |
|---|---|---|
| M227 | ROUND HEAD SCREW (1/4-20 NC x 1/2) | 2 |
| M236 | INTERNAL LOCKWASHER (5/8) | 5 |
| M240 | HEXAGON HEAD CAPSCREW (1/2-13 NC x 1-3/4) | 1 |
| M241 | INTERNAL LOCKWASHER (1/2) | 1 |
| M255 | INTERNAL LOCKWASHER (5/16) | 8 |
| M256 | INTERNAL LOCKWASHER (3/8) | 2 |
| M258 | HEXAGON HEAD CAPSCREW (3/8-16 NC x 1-1/2) | 2 |
| M265 | HALF DOG POINT SET SCREW (1/2-13 NC x 5/8) | 1 |
| M291 | WOODRUFF KEY (No. 15) | 2 |
| M309 | LIGHT JAM NUT (5/8-18 NF x 3/8) | 1 |
| M338 | WOODRUFF KEY (No. 27) | 1 |
| M343 | SQUARE HEAD PIPE PLUG (1/2) | 2 |
| M414 | HEXAGON HEAD CAPSCREW (5/16-18 NC x 7/8) | 8 |
| M422 | DRIVE SCREW | 2 |
| M600 | STRAIGHT SQUARE KEY (3/8 x 3/8 x 1-1/2) | 1 |
| M605 | OIL SEAL | 1 |
| M1519 | STRAIGHT SQUARE KEY (7/16 x 7/16 x 2-1/2) | 1 |
| 1037 | THROWOUT YOKE | 1 |
| 1330 | ALEMITE FITTING | 1 |
| 1340A | PIPE PLUG (1/2) | 1 |
| 1497 | CAPSCREWS | 4 |
| 1965R | INSTRUCTION COVER PLATE | 1 |
| 2727 | HUB NUT | 1 |
| 2757 | OPERATING SHAFT | 1 |
| 2909 | SPACER | 1 |
| 2923 | SNAP RING | 1 |
| 3799 | HAND LEVER | 1 |
| 6381A | INTERNAL GEAR | 1 |
| 6406A | GEAR HOUSING | 1 |
| 6661 | DRIVING RING | 1 |
| 6981 | COVER PLATE | 1 |
| 7611 | No. 5 S.A.E. CLUTCH HOUSING | 1 |

**When ordering parts kindly advise the Twin Disc Specification Number.**

# WC-252-1 and WC-253-1 CLUTCH REDUCTION GEAR ASSEMBLIES

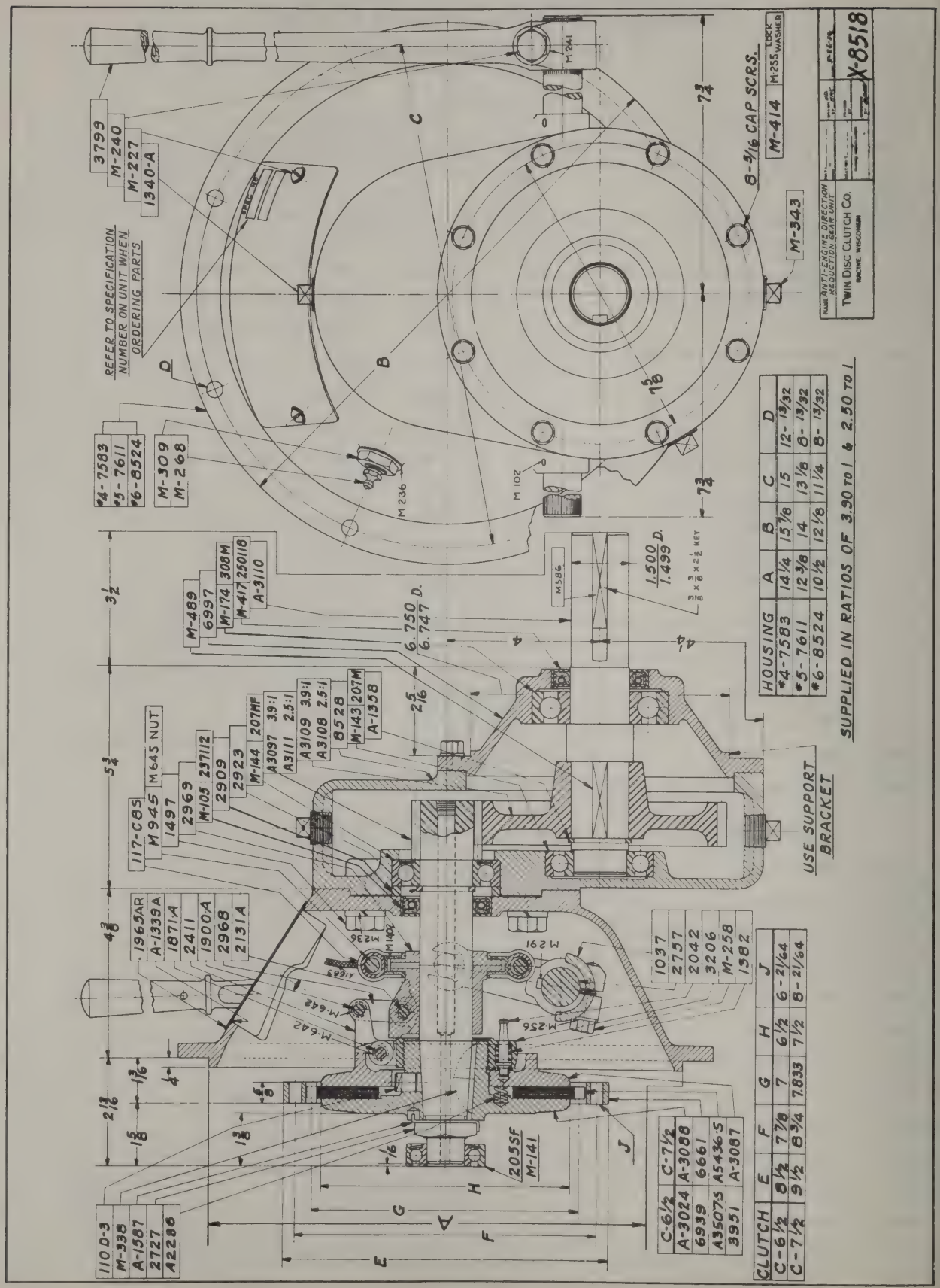

# WC-252-1 and WC-253-1 CLUTCH REDUCTION GEAR ASSEMBLIES

## TWIN DISC CLUTCH COMPANY
RACINE, WISCONSIN

Repair Parts List for

| Wis. Motor No. | Twin Disc No. |
|---|---|
| WC-252-1 | X8518 Model C107A2RG5 Clutch reduction gear, Spec. 15516 |
| WC-253-1 | X8518 Model C107A4RG5 Clutch reduction gear, Spec. 15748 |

All parts are interchangeable on the above Twin Disc clutch reduction gears unless otherwise specified.

| Twin Disc Part Number | Description | No. Req. |
|---|---|---|
| C-107 | CLUTCH ASSEMBLY per Spec. 15270 ..... | 1 |
| | Consisting of: | |
| H-18 | HUB and BACK PLATE ASSEMBLY ..... | 1 |
| | Consisting of: | |
| | 1 A3088 Hub and back plate | |
| | 1 110D3 Plate pin | |
| A-16 | ADJUSTING YOKE ASSEMBLY ..... | 1 |
| | Consisting of: | |
| | 1 3206 Adjusting yoke | |
| | 4 2411 Fingers | |
| | 4 1871A Finger pins | |
| | 1 2042 Adjusting lock pin | |
| | 1 1382 Adjusting lock pin spring | |
| | 4 M642 Snap rings | |
| S-387 | SLIDING SLEEVE ASSEMBLY ..... | 1 |
| | Consisting of: | |
| | 1 2969 Sliding sleeve, Bore 1.381 — 1.379 | |
| | 8 2968 Lever links | |
| | 4 2131A Link pins | |
| | 8 M642 Snap rings (5/16 x 1/2 x 3/64) | |
| | 4 1900A Lever link pins | |
| | 117C8S 1 CONE COLLAR ASSEMBLY ..... | |
| | Consisting of: | |
| | 2 M945 Hexagon head capscrews | |
| | 2 M645A Elastic stop nuts | |
| | 4 1395A Washers | |
| A5436S | DRIVING PLATE (3 segments) ..... | 1 |
| A2286 | RELEASE SPRING ..... | 6 |
| A3087 | FLOATING PLATE ..... | 1 |
| | MISCELLANEOUS CLUTCH AND REDUCTION UNIT PARTS | |
| A1339 | GASKET ..... | 1 |
| A1358 | CONE STOP RING ..... | 1 |
| A1587 | LOCKWASHER ..... | 1 |
| A1663 | FLEXIBLE HOSE ASSEMBLY ..... | 1 |
| A3097 | CLUTCH SHAFT and PINION (for WC-253-1 only) 3.9:1 reduction ..... | 1 |
| A3108 | GEAR (for WC-252-1 only) 2.5:1 reduction ..... | 1 |
| A3109 | GEAR (for WC-253-1 only) 3.9:1 reduction ..... | 1 |
| A3110 | GEAR SHAFT ..... | 1 |
| A3111 | CLUTCH SHAFT and PINION (for WC-252-1 only) 2.5:1 reduction ..... | 1 |
| M102 | OIL CUP (1/4) ..... | 2 |
| M105 | OIL SEAL (National 50055-2) ..... | 1 |

| Twin Disc Part Number | Description | No. Req. |
|---|---|---|
| M141 | BALL BEARING (MRC 205-SF) ..... | 1 |
| M143 | BALL BEARING (MRC 207-M) ..... | 1 |
| M144 | BALL BEARING (MRC 207-MF) ..... | 1 |
| M174 | BALL BEARING (MRC 308-M) ..... | 1 |
| M227 | ROUND HEAD SCREW (1/4-20 NC x 1/2) ..... | 2 |
| M236 | INTERNAL LOCKWASHER (5/8) ..... | 5 |
| M240 | HEXAGON HEAD CAPSCREW (1/2-13 NC x 1-3/4) | 1 |
| M255 | INTERNAL LOCKWASHER (5/16) ..... | 8 |
| M256 | INTERNAL LOCKWASHER (3/8) ..... | 2 |
| M258 | HEXAGON HEAD CAPSCREW (3/8-16 NC x 1-1/2) | 2 |
| M268 | MALE HYDRAULIC FITTING (1/8 N.P.T.) ..... | 1 |
| M291 | WOODRUFF KEY (No. 15) ..... | 2 |
| M309 | LIGHT JAM NUT (5/8-18 NF x 3/8) ..... | 1 |
| M338 | WOODRUFF KEY (No. 27) ..... | 1 |
| M343 | SQUARE HEAD PIPE PLUG (1/2) ..... | 2 |
| M414 | HEXAGON HEAD CAPSCREW (5/16-18 NC x 7/8) | 8 |
| M417 | OIL SEAL (National 50185-2) ..... | 1 |
| M489 | STRAIGHT SQUARE KEY (3/8 x 3/8 x 2) ..... | 1 |
| M586 | STRAIGHT SQUARE KEY (3/8 x 3/8 x 2-1/2) ..... | 1 |
| 1037 | THROWOUT YOKE ..... | 1 |
| 1340A | PIPE PLUG (1/2) ..... | 1 |
| 1497 | CAPSCREWS ..... | 4 |
| 1965R | INSTRUCTION COVER PLATE ..... | 1 |
| 2727 | NUT for hub ..... | 1 |
| 2757 | OPERATING SHAFT ..... | 1 |
| 2909 | SPACER ..... | 1 |
| 2923 | SNAP RING ..... | 1 |
| 3799 | HAND LEVER ..... | 1 |
| 6661 | DRIVING RING ..... | 1 |
| 6997 | COVER PLATE ..... | 1 |
| 7611 | No. 5 S.A.E. CLUTCH HOUSING ..... | 1 |
| 8528 | GEAR HOUSING ..... | 1 |

When ordering parts kindly advise the Twin Disc Specification Number.

# INSTRUCTIONS AND PARTS LIST FOR FUEL PUMP

**WISCONSIN MOTOR PART No. LP-38 – BLACKSTONE MFG. CO. No. GI-195 (Standard)**
**WISCONSIN MOTOR PART No. LP-38-C – BLACKSTONE MFG. CO. No. GI-195-C (Cold Weather: –65°F)**

The fuel pump, like all other parts of the engine, is subject to wear and you will find that any time after 500 hours of use, its efficiency will gradually decrease. This is indicated by the engines faltering at high speeds or when heavy loads are suddenly applied. The pump can easily be restored to its normal efficiency by the installation of a **Wisconsin Motor No. LQ-21-B** or **LQ-21-E** diaphragm kit.

1. Remove the fuel lines and the two mounting bolts which hold the pump to the engine. Take the pump to a work bench or suitable place.
2. With file make an indicating mark across a point at the union of castings (7 and 23). This is a positive location of the fuel line positions when reassembling. Remove six assembly screws (6) and remove fuel head. Dome bolt (1) is taken out, and the dome, (3) dome gasket (4) and filter screen (5) disassembled.
3. Turn head (7) over and remove three screws (13). Remove (8, 9, 10, 11 and 12) valve assemblies noting their positions. Discard Details 8, 9 and 11.
4. Clean head thoroughly with gasoline and a fine brush.
5. Holding fuel head (7) with diaphragm surface (containing 6 clearance holes) up, reassemble the valve spring retainer (10) into position deepest hole. Place new valve plate gasket (11) in position around this hole. Stand on end one of the new valve springs (9) in the retainer. Place a new valve (8) on top of this spring.
6. Place the other new valve (8) on top of brass valve seat next to the previously assembled parts, stand the other new valve spring (9) on top of this valve.
7. Carefully place valve plate (12) over these assemblies so the large raised ring is nearest the valve gasket (11). Insert and carefully tighten the three assembly screws (13).
8. Carefully clean and replace the filter screen (5).
9. Place new dome gasket (4) into the dome (3) and put this unit into position on the fuel head (7).
10. Put new dome bolt gasket (2) on the dome bolt (1), insert in the hole in the dome (3) and tighten properly.
11. Place this fuel head assembly in a clean place and we are ready to rebuild the lower diaphragm section.
12. Using a screw driver inserted into the coils of rocker arm spring (17) remove this spring and save.
13. Hold the mounting bracket (23) in the left hand with the rocker arm toward your body and the thumb nail on the end of the link (19) with the heel of right hand on the diaphragm (14) compress the diaphragm spring (16) at the same time pulling toward your body, this will unhook the diaphragm from the link (19) so it can be removed.
14. Clean the mounting bracket (23) with gasoline.
15. Place the remaining new cork gasket (15) on the corresponding surface of the mounting bracket (23). Replace the diaphragm operating spring (16) standing it into (23). Now repeat in reverse Step 13 using the new diaphragm. Replace rocker arm spring removed in Step 12.
16. Mount this assembly back on the engine in the position from which it was removed, using the new mounting gasket which is the last piece of the repair kit.
17. Crank the engine over to a position where the diaphragm (14). is laying flat on the mounting bracket (23). Place the fuel head (7) back in position so the indicating marks of Step 1 are in line, and start the six assembly screws approximately three turns. Again crank the engine over to a position where the diaphragm (14) is pulled down into (23) mounting bracket and tighten the six assembly screws (6) tightly.
18. Connect the fuel lines and you have a completely rebuilt fuel pump.

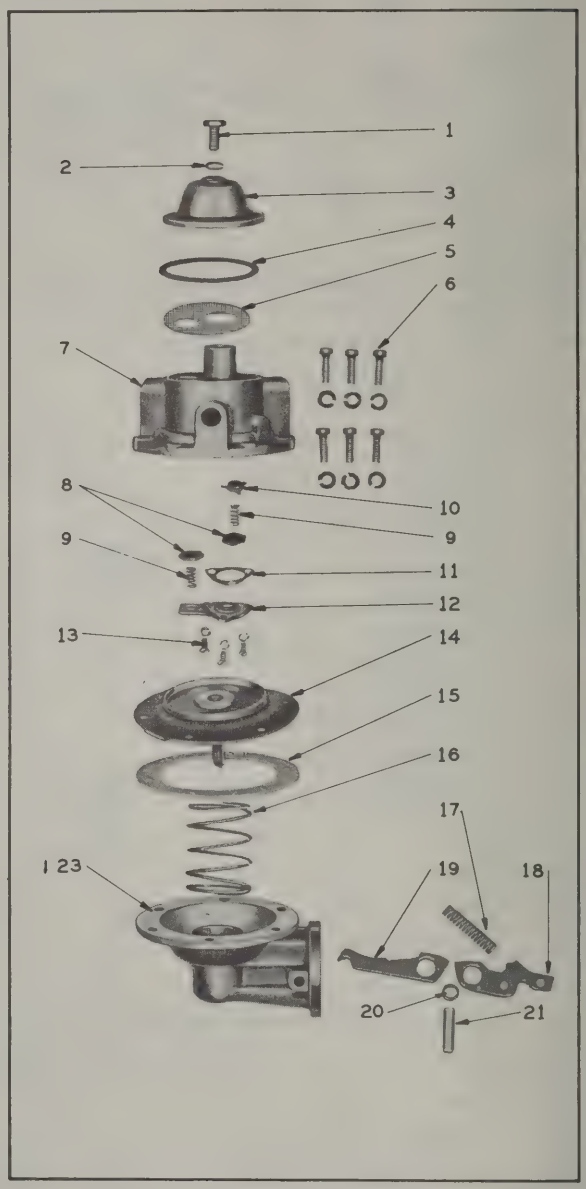


76520C

## INSTRUCTIONS FOR FUEL PUMP MAINTENANCE AND REPAIR

The gaskets (2 and 4) used in the fuel head (7) of the fuel pump have a natural tendency to shrink when left standing in a dry condition. This shrinking can create vacuum leaks which result in the hard starting of the engine. It is necessary after an engine has stood on the stockroom or show room floor any length of time that the dome bolt No. 1, the assembly screws (6) of which there are six and the fuel line connections be tightened carefully to assure quick starting and satisfactory operation thereafter.

## CLEANING OF FUEL PUMP

The industrial engine is used under so many adverse conditions that many times a pump will fail because of the dirt in the fuel head. This can be cleaned by this procedure.

1. With file make an indicating mark across a point of the union of castings (7 and 23). This is a positive location of the fuel line positions when reassembling.
2. Remove the two fuel lines.
3. Remove six assembly screws (6) and remove fuel head.
4. Bolt (1) is taken out, and the dome (3), dome gasket (4) and filter screen (5) disassembled.
5. The preceding steps reveal the sediment cavities of the head which are filled with dirt. Wash this out with gasoline and a fine brush, being careful not to damage the valve assemblies, in the lower cavity of the fuel head (7).
6. The pump is now ready to reassemble. Crank the engine over to a position where the diaphragm (14) is laying flat across the casting face (23). Place the fuel head (7) back in position so the indicating marks of Step No. 1 are in line and start the six assembly screws approximately three turns. Again crank the engine over to a position where the diaphragm (14) is pulled down into (23) the mounting bracket. Now tighten the six screws (6) securely.
7. Carefully clean and replace the filter screen (5).
8. Replace the dome gasket (4) into the dome (3) and put this unit into position on the fuel head (7).
9. Replace the gasket (2) on the dome bolt (1) and insert in the hole in the dome (3) then tighten securely.
10. Replace fuel lines and tighten securely. Your pump is now in condition to give many long hours of additional service.

## PARTS LIST

(Blackstone Part Numbers Shown)

| Ref. No. | Part Number | Description | No. Req. |
|---|---|---|---|
| 1 | FP-765 | PULSATOR DOME BOLT | 1 |
| * 2 | FP-766 | DOME BOLT GASKET | 1 |
| 3 | FP-754 | PULSATOR DOME | 1 |
| * 4 | FP-614 | DOME GASKET (Cork) | 1 |
| 5 | FP-657 | FILTER SCREEN | 1 |
| 6 | FP-762 | SCREWS for mounting fuel head | 6 |
| 7 | GI-46 | FUEL HEAD | 1 |
| * 8 | FP-756 | VALVE | 2 |
| * 9 | FP-644-7 | VALVE SPRING (7 coils) | 2 |
| 10 | FP-757 | VALVE SPRING RETAINER | 1 |
| * 11 | FP-613 | VALVE PLATE GASKET | 1 |
| 12 | FP-750 | VALVE PLATE | 1 |
| 13 | FP-759 | SCREWS for valve plate | 3 |
| ** 14 | LQ-21-B | DIAPHRAGM KIT–Standard (LP-38 Fuel Pump) | 1 |
| | LQ-21-E | DIAPHRAGM KIT–Cold Weather (LP-38-C Fuel Pump) | 1 |
| * 15 | FP-615 | DIAPHRAGM GASKET | 1 |
| 16 | FP-642S | DIAPHRAGM SPRING | 1 |
| 17 | FP-645 | ROCKER ARM SPRING | 1 |
| 18 | FP-545S | ROCKER ARM | 1 |
| 19 | FP-505 | LINKAGE | 1 |
| 20 | FP-498 | ROCKER ARM BUSHING | 1 |
| 21 | FP-553 | ROCKER ARM PIN | 1 |
| * 22 | FP-612 | MOUNTING GASKET (not illustrated) | 1 |
| 23 | GI-22 | MOUNTING BRACKET | 1 |

** Parts marked with an asterisk (*) are included in the LQ-21-B and LQ-21-E diaphragm kit.

**WISCONSIN MOTOR CORPORATION**
**Milwaukee 46, Wisconsin**

Order parts from nearest ***SERVICE STATION*** shown in directory following parts list.
***IMPORTANT:*** Always give Model, Specification and Serial Numbers as shown on name plate.

# WISCONSIN MOTOR CORPORATION

## APPROVED SERVICE STATIONS

The following concerns have service part stocks, facilities and trained personnel to render complete service on Wisconsin Air-Cooled Engines. We recommend you work through these service stations on your Wisconsin engine service requirements.

* DISTRIBUTORS

### ALABAMA

| | |
|---|---|
| ABBEVILLE | Abbeville Tractor & Implement Company |
| ALBERTVILLE | J. D. Chandler Cycle Co. |
| ALICEVILLE | Martin Truck & Tractor Co. |
| ANNISTON | Arnold Tractor Co. |
| ATHENS | Charles W. Spencer |
| ATMORE | Watson Hardware Company |
| BAYOU LA BATRE | Zewen Marine Service |
| BIRMINGHAM | Alabama Air-Cooled Motors, 725 Graymont Avenue |
| | Tractor & Equipment Co., 4401 First Ave. N. |
| BREWTON | Watson Hardware Company |
| CLAYTON | Beaty Motor Company |
| CULLMAN | G. W. Johnson Estate |
| DECATOR | Tractor & Equipment Company |
| DOTHAN | Whaley Trading Company, South East Street |
| ELBA | Redmon-Windham Tractor Co. |
| ENTERPRISE | Feagin's Machine Shop |
| EUFAULA | Duncan Manley Chevrolet Co., No. Eufaula St. |
| FLOMATON | Watson Hardware Company |
| FLORENCE | Rice & Lund Imp. Co., 119 So. Seminary St. |
| FOLEY | Foley Hardware Company |
| FORT DEPOSIT | Till Truck & Tractor Co. |
| FORT PAYNE | Stancell Imp. Co. |
| GADSDEN | Cushman Motor Scooter Co., 117 East Broad St. |
| HARTFORD | Harrison Equipment Company |
| HEADLAND | Walden Motor Co. |
| HUNTSVILLE | Farmers Tractor Co., 116 So. Gallatin St. |
| JASPER | Jasper Machinery & Foundry Works |
| LUVERNE | Luverne Implement Company |
| MAGAZINE POINT | Thomas Garage |
| MOBILE | Gravely Mobile Authorized Sales & Service 2014 Halls Mill Road |
| | Turner Supply Company |
| MONTGOMERY | * Parts Service Corporation, 408 Bibb Street |
| OPELIKA | Opelika Truck & Tractor Co. |
| OPP | Opp Equipment Co. |
| PRICHARD | Forestry Equipment Co. |
| RUSSELLVILLE | Felton Hdw. & Imp. Co. |
| TROY | Vinson Tractor Company, 1029 S. Brundidge Street |
| SAMSON | T. J. Brooks & Son |
| SCOTTSBORO | F. D. Proctor Tractor Co. |
| SELMA | Selma Parts Service Co., Inc., 1313 Water Ave. |
| TUSCALOOSA | Cain Machine Company, 1509 Queen City Ave. |

### ARIZONA

| | |
|---|---|
| CASA GRANDE | Engine Service, Inc., 202 E. Main Street |
| CHANDLER | Neil B. McGinnis Implement Company |
| COOLIDGE | Vern Walton Company, 930 E. Main |
| PHOENIX | * Pratt-Gilbert Hardware Company, P.O. Box 2230 |
| | Equipment Sales Co., 407 W. Washington |
| | Gilbert Pump & Equip. Co., P.O. Box 3796 Commerce Sta. |
| | Chas. E. Jones Battery & Elec. Co., 318 W. Jefferson |
| TUCSON | Smith Equipment Service, 2525 N. 1st Avenue |
| YUMA | Braden Tractor Company, P.O. Box 1631 |

### ARKANSAS

| | |
|---|---|
| ARKADELPHIA | Ashby & May |
| BATESVILLE | Barnett & Landers |
| BERRYVILLE | Berryville Machine Shop |
| BRINKLEY | Brinkley Farm Equipment |
| | Fred Williams Welding Shop |
| CONWAY | B and G Company |
| DEWITT | Graves Electric Co. |
| EL DORADO | Magneto Service & Supply Co. |
| ENGLAND | J. M. Johnson Company |
| | Wood Machinery Co. |
| FAYETTEVILLE | Andrew Implement Co. |
| FOREMAN | Delta Supply Co. |
| FORT SMITH | Carter-Tole Equipment Co. |
| MAGNOLIA | Kelso Equipment Co. |
| | Sutton & Son Magneto Service |
| MARSHALL | Horton Motor Co. |
| McCRORY | McCrory General Repair Shop |
| McGEHEE | Gill Tractor Co. |
| MENA | Bradley's Hardware |
| MORRILTON | Farmers Tractor & Implement Co. |
| MT. IDA | Montgomery County Farm Equipment Co. |
| NASHVILLE | Nashville Distributing Co. |
| NEWPORT | Short & Brownlee |
| N. LITTLE ROCK | * Lewis-Diesel Engine Co., of Arkansas, 3021 E. Broadway |
| PINE BLUFF | Farmers Tractor & Equipment Co. |
| POCHONTAS | Jones Implement Co. |
| ROGERS | Newt Hailey Supply Co. |
| RUSSELLVILLE | Sugar Creek Creamery |
| SEARCY | Van Patton Tractor Co. |
| STUTTGART | Waggoner Magneto Co. |
| TEXARKANA | B. N. Woodard Farm Implement Co. |
| WARREN | J. T. Ederington |

### CALIFORNIA

| | |
|---|---|
| ALHAMBRA | Ja R Engine & Supply, 1819 W. Valley Blvd. |
| ALTURAS | Farmers Exchange |
| ANAHEIM | Orange County Tractor Co., Lincoln & Manchester |
| ARCATA | Brizard–Matthews Machy. Company |
| ARVIN | Mitchells |
| BAKERSFIELD | Farm Service & Implement Co., Route 4, Box 585 |
| | Janco Pump & Engine Co., 2309 Chester Avenue |
| BISHOP | Black's Machine Shop, P.O. Box 551, 169 Willow St. |
| BLYTHE | Beeler–Thomas Implement Company |
| BRAWLEY | Valley Auto Supply |
| BURBANK | Wanamaker Rentals, 203 West Olive |
| CALEXICO | Valley Auto Supply |
| CHICO | Jeffery Bros., 2400 Park Avenue |
| | Sierra Tractor & Equipment Co., 1240 Park Avenue |
| COLUSA | I. G. Zumwalt Company |
| CORCORAN | Sawtelle & Rosprim |
| COURTLAND | Herzog's Garage |
| DELANO | Central California Implement Co., 918 Main Street |
| EL CENTRO | Valley Auto Supply, 633 State Street |
| EL MONTE | Tex-Kan Service, 11501 E. Garvey |
| EMERYVILLE | * E. E. Richter & Son, 5725 Hollis Street |
| ESCONDIDO | Webb Bros., 252 W. Grand Avenue |
| EUREKA | Kramer Auto Supply Company, 4th & 'C' Streets |
| FRESNO | A. P. Lish, 1427 Broadway |
| | Peerless Tractor & Equipment Co., 1776 'H' Street |
| GARDENA | Gardena Mower Works, 1609 W. Redondo Beach Blvd. |
| GEYSERVILLE | Lampson Tractor & Equipment Company |
| GLENDALE | Active Rentals, 226 W. Los Feliz |
| GLENDORA | Foothill Supply Company, P.O. Box 218 |
| HANFORD | Hanford Farm Supply Co., 309 E. 7th Street |
| HEMET | Steve's Auto Parts, 1205 E. Florida |

| | |
|---|---|
| INDIO | Suski & Sakemi, P.O. Box 488 |
| KING CITY | Pringle Tractor Company |
| LANCASTER | Johnson & Schaffert, Ave. I at 10th Street West |
| LODI | Wright's Garage, 214 N. Sacramento Street |
| LOMPOC | Lompoc Equipment Company |
| LONG BEACH | Curtis & Christensen, 501 E. Anaheim |
| | Smith & Thorp, 141 E. Anaheim |
| LOS ANGELES 11 | * Continental Sales & Service Company 3817 South Santa Fe Avenue |
| | Harvel Truck Equipment Co., 1000 E. 8th Street |
| | Oliphant Bros., 6064 Venice Blvd. |
| LOS BANOS | Anderson Farm Equipment Co., 931 'I' Street |
| LYNWOOD | Franklin Auto Supply Co., 4339 Imperial Highway |
| MADERA | James Tractor & Implement Company |
| | Thompson & Gill, Inc., South Pine Street |
| MARYSVILLE | Middleton Implement Company, 600 Third Street |
| MERCED | Laird Welding & Mfg. Co., 13th & 'J' Streets |
| MODESTO | Stanislaus Impl. & Hardware Company, 10th & 'F' Sts. |
| MOUNTAIN VIEW | B & H Equipment Co., 2100 El Camino Real. |
| MURRIETA | Murrieta Machine Shop |
| NAPA | Bert Williams & Son, 831 First Street |
| NEWCASTLE | Placer Tractor & Implement Company |
| NEWPORT BEACH | Harmath Electric & Mfg. Co., 801 Coast Highway |
| NORTH HOLLYWOOD | Johnson Equipment Co., 6900 Lankershim Blvd. |
| OAKLAND | Bay Cities Equipment Co., 2606 Cypress Street |
| ONTARIO | A & A Equipment, Holt & Ramona |
| ORLAND | H. O. Holt |
| ORO GRANDE | Oro Grande Implement Company |
| OROVILLE | Gibbons Equipment & Repair, 2295 Quincy Rd. |
| OXNARD | Maulhardt Equipment Co., 815 N. Oxnard Blvd. |
| PASADENA | Tarr & Stauffer, 3204 E. Colorado |
| PASO ROBLES | H. A. Wood Welding & Machine Shop, 1207 - 13th Street |
| PORTERVILLE | Porterville Farm Implement Co., 428 S. Main Street |
| REDDING | Gerlinger Steel & Supply Co., 1527 Sacramento |
| REEDLEY | Grower's Supply Company |
| RIVERSIDE | Brown's Engine Rebuilding, 3853 Eighth Street |
| SACRAMENTO | Muntz Bros., 301 North 12th Street |
| | Sacramento Machinery Co., 2000 Capitol Ave. |
| SALINAS | Pringle Tractor Company, 10 Abbott Street |
| SAN BERNARDINO | Ray's Equipment Rentals, 1040 E. Baseline |
| SAN CARLOS | Wrigley Pump Company, 611 Old County Road |
| SAN DIEGO | Webb Farm Equipment Co., 940 'K' Street |
| SAN FRANCISCO | Auto Electric Supply Co., 543 Van Ness Avenue |
| | H. V. Carter Co., Inc., 52 Beale |
| | Wade's Equipment Repair, 1675 Galvez Avenue |
| SAN JOSE | Kronk Machine & Mfg. Co., 566 W. Julian Street |
| SAN LUIS OBISPO | Fred H. Johnson, 1119 Garden Street |
| SANTA ANA | James Requarth, 111 Spurgeon Street |
| SANTA BARBARA | Howard P. Miller, 29 State Street |
| | Milpas Rental Service, 6 N. Milpas Street |
| SANTA CRUZ | Farm Supplies & Equip. Co., 5381 Old San Jose Rd. |
| SANTA MARIA | Joseph G. Moore Co., S. Highway 101 |
| SANTA ROSA | Hanspeter Tractor & Equipment Co., 430 A Street |
| SEASIDE | Brooks Cyclery, 806 Fremont Street |
| SOUTH DOS PALOS | Yonkers & Johnson |
| SOUTH GATE | Lennie's Garden Center, 10132 Atlantic |
| STOCKTON | Valley Engine Shop, 1402 East Miner Avenue |
| TAFT | Tasco Auto Parts |
| TRACY | W & P Sales Co., South Highway 50 |
| TULARE | Linder Truck & Tractor Company |
| TULE LAKE | Floyd A. Boyd Company |
| TURLOCK | Fernandez Implement Co., 214 S. Center Street |
| UKIAH | Holz Company, Clay at Railroad |
| VAN NUYS | So-Cal Equipment & Supply, 7227 Van Nuys Blvd. |
| VENTURA | Gem Equipment Co., 1665 Ventura Avenue |
| VISALIA | Charles J. Hammer Mchy. Co., 915 E. Main |
| WASCO | Wasco Farm Equipment Co. |
| WEST LOS ANGELES | Sam's U-Drive, 2431 S. Sepulveda |
| WILMINGTON | Industrial & Marine Engine Co., 804 E. Anaheim St. |
| WILLOWS | I. G. Zumwalt Company |
| WHITTIER | Whittier Motor Parts, 306 S. Greenleaf |
| WOODLAND | Middleton Implement Company |
| YREKA | Floyd A. Boyd Company |

## COLORADO

| | |
|---|---|
| ALAMOSA | Sorum Tractor |
| BRUSH | Farmer's Elevator & Supply |
| BURLINGTON | McArthur Impl. Company |
| CENTER | Hurt Equipment Company |
| COLORADO SPRINGS | Coniff Electric Co. |
| CRAIG | Nicodenus Implement |
| DELTA | Delta Farm Supply |
| DENVER | * Central Equipment Co., 1435 Market St. |
| | Colorado Toro Company, 4700 Cherry Creek Drive |
| | Engine Supply Company, 1862 Lawrence |
| | Western Machinery |
| FORT COLLINS | Stansbury-Ghent Farm Equipment |
| FT. MORGAN | Sailsbury Implement |
| GRAND JUNCTION | S & M Supply Company |
| GREELEY | Rainforth Equipment Company |
| HOLYOKE | Hagemann Implement |
| LAMAR | Motor Supply |
| LIMON | Quist–Holmes |
| LOVELAND | Farmers Implement & Supply |
| MONTE VISTA | Joe Riggenbach |
| MONTROSE | Seagler Motor Company |
| PUEBLO | Williams Brothers |
| RANGLEY | Industrial Instrument & Supply |
| STERLING | Morrison Implement |
| YUMA | Perlenfein Implement Company |

## CONNECTICUT

| | |
|---|---|
| BRIDGEPORT | The Arnold Company, 3225 Fairfield Avenue |
| HARTFORD | McCallum Motor Service, 78 Maple Street |
| MANCHESTER | Capitol Equipment Company, 38 Main Street |
| NEW HAVEN | W. I. Clark Company, P.O. Box 301 |
| NEW MILFORD | New Milford Tractor |
| TORRINGTON | Ruwet-Sibley Implement Co. |
| UNCASVILLE | Montville Mower Shop, R.F.D. 1 |
| WATERBURY | Contractors Supply Company, Inc., P.O. Box 1189 |
| WETHERSFIELD 9 | F. C. Matteson, 450 Silas Deane Hwy. |
| WINDSOR LOCKS | The F. S. Bidwell Company |
| | * John Reiner & Company 12-12 37th Avenue Long Island City, New York |

## DELAWARE

| | |
|---|---|
| SMYRNA | Farmers Supply Company |
| | * Service Supply Corporation 20th & Venango Streets Philadelphia, Pennsylvania |

## DISTRICT of COLUMBIA

| | |
|---|---|
| WASHINGTON, D.C. | Tool & Supply Co., 10th & Girard Sts., N. E. |
| | * Phillips Machinery & Tractor Company P.O. Box 549 Alexandria, Virginia |

## FLORIDA

| | |
|---|---|
| APALACHICOLA | Wefing's |
| BONIFAY | Beall Implement & Hardware Co. |
| BOYNTON BEACH | DeMarco Tractor & Implement Co., Box 458 |
| CANTONEMENT | Cantonement Service Station |
| COCOA BEACH | Brevard Marine Sales & Service |
| DAYTONA BEACH | P & M Carburetor, 402 No. Beach |
| DeFUNIAK SPRINGS | City Tractor & Implement Company |
| DeLAND | Hubert Talton |
| EUSTIS | Jefferis Auto Electric |
| FLORENCE VILLA | Growers Service Company |
| FORT LAUDERDALE | Fleet Maintenance Service, 824 N. E. Third Ave. |
| FORT PIERCE | Bill Free Company, 3312 Orange Street |
| GAINESVILLE | Florida Saw Company, 2727 NW 6th Street |

| | |
|---|---|
| HASTINGS | Farmer's Supply Company |
| JACKSONVILLE | * M. D. Moody & Sons, Inc. |
| JAY | Malone Tractor Company |
| LAKE CITY | Columbia Saw Company |
| LAKE WALES | Boyte Auto Supply Co. |
| LIVE OAK | Ottis Brown Tractor Company |
| MARIANNA | * West Florida Equipment Company |
| MELBOURNE | Gillis Machine Shop |
| MIAMI | * Neff Machinery, Inc., 2601 N. W. Fifth Avenue |
| MONTICELLO | Rogers Small Engine Sales & Service |
| OCALA | Link Brothers |
| ORLANDO | * Highway Equipment Service |
| PALATKA | Turner Radiator Shop |
| PANAMA CITY | Hurston Motor Company |
| PENSACOLA | D. M. Witherill Company, 713 S. Palifox Street |
| PERRY | Perry Truck & Tractor Company |
| PRINCETON | Glade & Grove Supply Co., P. O. Box 198 |
| QUINCY | Suber & Johnson |
| TALLAHASSEE | Stout Equipment Company |
| TAMPA | * Industrial Supply Corporation, 1800 2nd Avenue |
| VERO BEACH | Jack Fransen |
| WAUCHULA | Barney's Pump & Irrigation Company |
| WEBSTER | John W. Barber, Jr. |
| WEST PALM BEACH | Clark J. Smith, 400 Tamarind |
| WEWAHITCHKA | Prescott's Garage |

## GEORGIA

| | |
|---|---|
| ADEL | Adel Trading Company |
| ALBANY | * Blalock Machinery & Equipment Co., 920 W. Broad |
| | Wisconsin Sales & Service |
| AMERICUS | Carburetor & Ignition Service |
| ATHENS | Russell Daniel, Inc. |
| ATLANTA | * Blalock Machinery & Equipment Co. |
| | 225 Forsyth St., S.W. |
| | Baker Auto Parts Company |
| | Evans Implement |
| | Farm & Garden Equip., Inc., 10 Brady Ave., N.W. |
| | Georgia Lawn Equipment Company |
| | Lawn Equip. & Garden Supply Co. |
| AUGUSTA | Richmond Supply Company |
| BAINBRIDGE | Bainbridge Truck & Tractor Company |
| BAXLEY | Lewis Brothers |
| BLAKELY | Hill Implement Company |
| CAIRO | Sanders Garage |
| CLAXTON | Chick Sikes Machinery Company |
| COLQUITT | Hilton Jones Motor Co. |
| | Newton Bros. Implement Co. |
| COLUMBUS | Columbus Tractor & Mchry. Company |
| | McDowell Motor & Implement Company |
| CUTHBERT | Randolph Tractor Company |
| DAWSON | Terrell Implement Company |
| DONALSONVILLE | Harvey Implement Company |
| DUBLIN | Cullens Engine & Supply Co. |
| FITZGERALD | Martin Manufacturing Company |
| GAINESVILLE | Gainesville Feed & Poultry Co. |
| JESUP | Salter-Carswell Corporation |
| MACON | Anderson Tractor & Equipment Company |
| | C. W. Farmer Company |
| | Forrestry Equipment Company |
| OCILLA | Ocilla Farm Implement Company |
| PELHAM | Rogers Garage |
| PERRY | George C. Nunn & Son |
| QUITMAN | Farm Utility Exchange |
| ROCHELLE | Mashburn & Fitzgerald |
| ROME | Rome Farm Equipment Company |
| SANDERSVILLE | Jesse Newsom |
| SAVANNAH | Morgan's, Incorporated |
| SCOTLAND | Flanders Brothers |
| STATESBORO | Pineland Trading Corporation |
| SWAINSBORO | Hinson Saw Company |
| SYLVANIA | Stubbs Implement Company |
| THOMASVILLE | Godwins Garage |
| VALDOSTA | Schroer Implement Company |
| VIDALIA | Sea Island Cotton Gin Company |
| WAYCROSS | * Blalock Machinery & Equipment Co. |
| | 1515 Albany Avenue |
| | Tractor & Equipment Company |

## IDAHO

| | |
|---|---|
| AMERICAN FALLS | Falls Supply Company |
| ASHTON | Robert Timmons Implement Co |
| BLACKFOOT | Roberts Equipment Co. |
| BOISE | The Sawtooth Company, 1115 Grove Street |
| BUHL | Valley Tractor & Implement Co. |
| BURLEY | Idaho Implement Co |
| CALDWELL | B & M Equipment |
| GOODING | Gooding Implement |
| GRACE | Longenbohn & Sons |
| IDAHO FALLS | * Arnold Machinery Company, Inc., 1302 West Broadway |
| JEROME | Magic Tractor & Implement Co |
| LEWISTON | Idaho Cletrac Sales Company, 1515 Main Street |
| | Jameson Auto Parts Company |
| MALAD | Jones Hardware & Implement |
| MONTPELIER | Montpelier Truck & Tractor Company |
| POCATELLO | Rush Equipment Company |
| PRESTON | Palmer Motor & Implement Company |
| PRIEST RIVER | Kaniksu Tractor |
| REXBURG | Ray Payne Equipment Company |
| SHOSHONE | Shoshone Implement |
| TWIN FALLS | Williams Tractor Company |
| WEISER | H–J–H Company, 35 E. Commercial St. |
| | * Anderson Machinery |
| | 401 N. W. Fourth Avenue |
| | Portland 9, Oregon |
| | * Star Machinery Company |
| | 241 Lander Street |
| | Seattle, Washington |

## ILLINOIS

| | |
|---|---|
| ALEDO | Thede Company |
| ALTON | Stanka Garage, Delmar at State Street |
| ANTIOCH | Pederson Brothers Implement |
| ARTHUR | H. L. Phillips Implement Store |
| AUBURN | Narmont Machinery Co. |
| BARRINGTON | Lakes Oil & Supply |
| BATIVIA | Thomas & Carlson |
| BELLEVILLE | H. Edwards Farm Equipment Company |
| | S. 8th Street, Route 13 |
| BLOOMINGTON | Bloomington Battery Service Co. |
| BRIDGEPORT | Abel Bros. |
| BUSHNELL | Glenn S. Lovell Impl. |
| CANTON | Jaeger Implement Company |
| CARMI | Clinton Murphy Company |
| CHENOA | Downes Motor Co. |
| CHICAGO | * Industrial Engine & Parts Company |
| | 2345 S. Pulaski Rd. |
| | Portable Equipment, 109 E. 75th Street |
| | Keen Edge Company, 5246 South Halsted Street |
| CHRISMAN | Keith Culton Implement Company |
| CLINTON | Holtz Farm Supply |
| COLUMBIA | L & S Farm Supply Co. |
| CRYSTAL LAKE | Crystal Lake Farm Store |
| DANVILLE | Tom's Auto Electric Service |
| DECATUR | Bruce Implement Company, 929 E. William Street |
| DeKALB | Bill Halverson Implements |
| EAST ST. LOUIS | National Auto Supply, 1100 Illinois Avenue |
| EDWARDSVILLE | Madison County Tractor & Equipment Company |
| EFFINGHAM | H & D Motor Service |
| ELBURN | G. R. Johnson Company |
| ELGIN | Phillips Auto Parts, 370 Brook Street |
| ELKART | E. K. Brooker Company |
| ELMHURST | Smeja Motors, Lake & Church Road |
| FAIRBURY | Farmers Impl. Co. |

| | |
|---|---|
| FISHER | Power Equipment Co. |
| FREEPORT | Stukenberg Implement Sls. |
| GARRETT | Horton Bros. & Harde. |
| GENESEO | Frank G. Ward Co. |
| GOLDEN EAGLE | Haug Mercantile Company |
| GRAYVILLE | Oil Field Motor Service, Inc. |
| HARDIN | Joe Hurley Sales & Service |
| HARRISBURG | Paul Baker Machine Shop |
| HOOPESTON | Cox Bros. |
| HUTSONVILLE | Abel Bros. |
| JACKSONVILLE | Cully Implement Company |
| JERSEYVILLE | C. & W. Equipment Company |
| JOLIET | W. C. Bartelt, 155 N. Joliet |
| KANKAKEE | Electrical Equipment Co. |
| KEWANEE | Germans Service Station |
| | H & H Oliver Store |
| KIRKWOOD | Smith Implement Service |
| LOSTANT | Englehaupt & Lyons Impls. |
| MACOMB | Cole & Kelso |
| MARISSA | Clyde J. Wylie Tractor Company |
| MASON CITY | Baugman Service Co. |
| MATTOON | Daily Implement Company |
| MENDOTA | Schmitz Implement Company |
| METROPOLIS | Hinners Bros. Company |
| MILTON | Hoover Bros. Company |
| MINONK | Turley Farm Supply |
| MOMENCE | Robert Wille, Inc. |
| MONMOUTH | Smith Implement Service |
| Mt. CARMEL | Evans-Swanson Engine & Supply Co. |
| MOUNT PROSPECT | Charles B. Gray Sales |
| MURPHYSBORO | Beckman Implement Company |
| NEWMAN | Gossett Implement Co. |
| NIANTIC | Bruce Implement Company |
| NORTH AURORA | Ted Plantes |
| OLNEY | Farmers Equipment & Supply Company |
| PARIS | M. Farnham Implement Company |
| PAXTON | Farmers Implement Co. |
| PEORIA | Power Equipment Co., 3600 Lincoln Avenue |
| PLAINFIELD | DuPage Implement Co. |
| PONTIAC | Zimmerman Implement Co. |
| PRINCETON | Wilds Motor Service Company |
| PROPHETSTOWN | Thede Company |
| QUINCY | E. M. Chatten Implement Company |
| | 812-18 Hampshire Street |
| RIDGEWAY | Ellis Implement Company |
| ROCHELLE | B & E Welding Co. |
| ROCKFORD | Baxter Farm Supply |
| ROCK ISLAND | Lohse Automotive Service |
| SALEM | Heck's Farm Equipment Co. |
| SANDWICH | Harrison Implement Co. |
| SOUTH HOLLAND | Calumet Farms Supply, 15700 Cottage Grove Avenue |
| | James B. Gouwens Implement Sales |
| SPRINGFIELD | Gravely-Illinois Co. |
| | Grieme Bros. |
| | Krell Farm Supply |
| SPRING VALLEY | Burl F. George Company |
| STERLING | Mylin's Agricultural Store |
| STOCKTON | Stockton Sales Company |
| TUSCOLA | Dillavou & McDaniels |
| URBANA | Power Equipment Company |
| VILLA PARK | DuPage Service Co., 333 W. St. Charles Road |
| VIRGIL | Virgil Implement Shop |
| VIRGINIA | Kerry Implement Co. |
| WAUCONDA | Victor Implement Company |
| WHEELING | Stavros Implement Company |
| WINCHESTER | Taylor Implement Company |
| WOODSTOCK | E. L. Bakkom Company |

* Allied Construction Equipment Company
4015 Forest Park Avenue
St. Louis, Missouri

* Engine Power, Inc.
Oconomowoc, Wisconsin

## INDIANA

| | |
|---|---|
| ALBANY | Shroyer Implement Company |
| ALBION | Truelove Bros. |
| ANGOLA | Covell Implement Store |
| AUBURN | Koeneman Farm Equipment Company |
| AURORA | Randall Implement Company |
| BATESVILLE | Fledderman Implement Company |
| BEDFORD | Stanley Crawford |
| BLOOMINGTON | Graham Motor Sales |
| BLUFFTON | Moser Implement Company |
| BREMEN | Bremen Equipment Company |
| BRAZIL | Shaffer & Co. |
| BROOKSTON | Brookston Implement Company |
| BROOKVILLE | Franklin Supply |
| CAMDEN | Camden Hardware |
| CLAYTON | Stanley Implement Company |
| COLUMBIA CITY | New Way Sales & Service |
| COLUMBUS | Schneider Implement Company |
| CORYDON | Kenneth H. Brown & Son |
| COVINGTON | Kerr-Rayburn Implement Company |
| CRAWFORDSVILLE | O. E. Straub |
| CROWN POINT | Gruel Bros. |
| CULVER | Osborn Seed |
| DECATUR | Klenk's |
| ELWOOD | Landrum Implement Company |
| | McNight Farm Equipment |
| ETNA GREENE | Heisler Runner Guard Inc. |
| EVANSVILLE | P. E. Phillips & Son |
| FARMLAND | W. J. Green |
| FLORA | E. E. Landis Company |
| FORAKER | Hess Bros. Garage |
| FORT WAYNE | Korte Bros. |
| | Heine Implement Company |
| FOWLER | Freeland Auto & Tractor Corp. |
| FRANCESVILLE | Winamac Sales Co. |
| FRANKFORT | Farmers Implement Sales |
| GARY | Lud's Scooter Sales, 457 Massachusetts Street |
| GOODLAND | Beckley Implement Company |
| GOSHEN | Elkhart Co. Farm Bureau Co-op. Ass'n |
| GREENCASTLE | Farmer's Supply of Greencastle, Inc. |
| GREENFIELD | Souder & Hammet, Inc. |
| GREENSBURG | Thurston Implement Company |
| HAMMOND | Carstensen's Service Company |
| | 6950 Indianapolis Blvd. |
| HARLAN | Harlan Farm Supply |
| HAUBSTADT | Schmits & Petitjean |
| HOAGLAND | Hoagland Implement Company |
| INDIANAPOLIS | * Eagle Machine Co., Inc., 635 E. Market Street |
| JAMESTOWN | Hoovermale & Hedge |
| JASPER | Hoffman Bros. |
| KENTLAND | Gerald McCarty Co. |
| KOKOMO | Francis Tractor Sales |
| KNOX | Ray Downs & Sons |
| LaCROSSE | Sumerville Implement Company |
| LAFAYETTE | Lyman Coal Company |
| LaOTTA | Brindle Bros. |
| LaPORTE | Streiters Sales & Service |
| LEBANON | Hine & Weber Company |
| LIBERTY | Brier Implement Company |
| LIGONIER | Nighsonger Farm Equipment |
| LOGANSPORT | Lehnus Bros. |
| LYONS | Lyons Equipment |
| MADISON | Irwin Farmers' Store |
| MARION | Glasser Electric Company |
| | Ken's Truck & Tractor Service |
| MARTINSVILLE | Crews & Clark, Inc. |
| MELLOT | Kerr Tractor & Implement Company |
| MICHIGAN CITY | Salter Garden Tractor Sales |
| MODOC | Modoc Sales |
| MOORESVILLE | D. C. Jessop & Son |
| MORROCCO | Castogina Tractor & Implement |
| MONTICELLO | Monticello Sales Company |

| | |
|---|---|
| MT. VERNON | Stephen Implement Company |
| MUNCIE | Ramsey Tractor Sales |
| NAPPANEE | Nappanee Implement & Supply Company |
| NEW BERRY | Kuhlenschmidt Imp. Co. |
| NEW CARLISLE | C. C. Kelley & Sons |
| NEW CASTLE | Wilson Grain & Implement |
| NEW HAVEN | Farm Implement Store |
| NOBLESVILLE | Cowan & Shank, Inc. |
| OTTERBEIN | Joe Vaughn |
| OTWELL | Scraper Sales Company |
| PALMYRA | Jacobi Sales & Service |
| PATRIOT | Robert Bunger |
| PENDLETON | Wm. Ring & Sons |
| PERU | Peru Feed & Farm Equipment Company |
| | Howard Philabaum, R. R. 3 |
| PLYMOUTH | Downs Brothers |
| PORTLAND | Justin Schafer Company |
| PRINCETON | Hunt Motor Sales |
| RICHMOND | Daggett Implement Company |
| ROCHESTER | Excel Auto Parts |
| | Travis Imp. Co. |
| ROCKPORT | Rockport Implement Company |
| ROCKVILLE | Ray Bolsley |
| ROSSVILLE | Ralph Rodkey |
| RUSHVILLE | Power Implement Company |
| RUSSIAVILLE | Martin's Service Station |
| SCOTTSBURG | West Auto Parts Company |
| SHIPSHEWANA | Wana Implement Company |
| SHELBYVILLE | D & S Sales & Service |
| | Needler's John Deere Store |
| SEYMOUR | Corde's Hardware |
| SILVER LAKE | Asa Hines |
| SOUTH BEND | General Equipment & Machine Company |
| SOUTH WHITLEY | The Farmers Store |
| STROH | Stroh Implement Company |
| SULLIVAN | Monroe Feed & Implement Sales |
| SYRACUSE | Ward Farm Equipment Company |
| TERRE HAUTE | Graham Grain Company |
| TIPTON | F. Ray Hull & Son |
| VALPARAISO | Ketterman Sales & Service |
| VEVAY | Vevay Farm Supply |
| VINCENNES | Saiter-Morgan Company |
| WABASH | Wabash Implement Company |
| WAKARUSA | Jonas A. Miller |
| WARREN | Daugherty's Farm Equipment Company |
| WARSAW | Robert Gilliam Company |
| WASHINGTON | Hart Equipment Company |
| WESTFIELD | Sheetz Implement Company |
| WILLIAMSPORT | Stamm Implement Company |
| WINCHESTER | Goodrich Brothers, Inc. |
| | Super Farm Store |
| WINDFALL | Bollinger Brothers |
| WINIMAC | Winimac Sales Company |
| WORTHINGTON | Farris Trading Post |
| | * Atlas Auto Parts & Grinding Company 1326-30 W. Jefferson Louisville, Kentucky |
| | * Industrial Engine & Parts Company 2345 S. Pulaski Rd. Chicago, Illinois |
| | * Cincinnati Engine & Parts Company 2525 Vine Street, Cincinnati, Ohio |

## IOWA

| | |
|---|---|
| ALGONA | Bradley Brothers |
| ALTA | Russell W. Peterson |
| ARLINGTON | Earl H. Crawford |
| ATLANTIC | Sothman Motor Company |
| BATTLE CREEK | Miller Implement Company |
| BURLINGTON | Frick Motor Company |
| CARROLL | Farm and Home Store |
| CEDAR FALLS | Al Matson & Son Implement Company |
| CEDAR RAPIDS | Iowa Tractor & Machinery Company |
| CENTRAL CITY | Wood Tractor Company |
| CHEROKEE | F. D. Booth Implement Company |
| CLINTON | Nelson Auto Electric Company |
| | Petree Carburetor Service |
| DAVENPORT | A. H. Wiese Equipment Company |
| DES MOINES | * Port Huron Mchry. Company, 301 E. Court Avenue |
| | Hawkeye Machinery |
| | David Mattson Company |
| DUBUQUE | J. J. Behr Implement & Company |
| ELDON | Thomas Implement Company |
| EMMETSBURG | Neary Implement Company |
| FAIRFIELD | Goode Implement Company |
| FORT DODGE | Kenray Implement Company |
| HAMPTON | Stover Sales & Service |
| HOMESTEAD | Amana Society |
| IOWA FALLS | Manning W. Howell |
| KALONA | Glen Wahl Machine Shop |
| KEOKUK | Leon Short & Son |
| LENOX | Barker Implement Company |
| MARION | Marion Machinery Company |
| MARSHALLTOWN | Heuer Truck & Equipment Co |
| MASON CITY | Wittenberg Implement Co. |
| MELBOURNE | Wiemers Implement Company |
| MT. PLEASANT | Lloyd Peterson |
| MUSCATINE | Coyner Motors Company |
| ONAWA | East Onawa Implement Company |
| OSKALOOSA | Lytle Implement Company |
| PELLA | Mart Hoeksema |
| PILOT GROVE | J. J. Nichting |
| PRESTON | Kunau Implement Company |
| SANBORN | Geo. C. Getting |
| SIOUX CITY | Carlson Machine Works |
| | Gene Reilly Farm Store |
| SPENCER | Struthers Tractor Company |
| SPILLVILLE | Balik Implement Store |
| TIPTON | Brendes Farm Equipment Company |
| VINTON | Vinton Implement Company |
| WAUKON | Valerie Dundee |
| WEBSTER CITY | Perry Williams Service |
| WEST LIBERTY | Diamond Motor Service |
| WEST UNION | Ralph Pixler & Son |

## KANSAS

| | |
|---|---|
| ABILENE | Wright Oil & Implement Co |
| BELOIT | Boettcher Supply, 210 North Mill Street |
| | Fuller Implement Company, 109 East 2nd Street |
| BURLINGTON | A. B. Caldwell |
| CHANUTE | Frank F. Young, 17 S. Ashby Street |
| COFFEYVILLE | Acme Foundry & Machine Company, 1502 Spruce |
| COLBY | Gunnels Tractor Company |
| COLUMBUS | Columbus Implement Company |
| CONCORDIA | Martin Tractor Co., Inc., 826 West Fourth |
| COUNCIL GROVE | Coolidge Implement Company |
| CUNNINGHAM | Kincheloe Implement Company |
| DODGE CITY | Scheufler Supply Company, Inc. |
| EL DORADO | Kropf Service Shop, 1214 North Main Street |
| EUREKA | Straight Motor & Equipment Company |
| FORT SCOTT | Hicks Auto Supply, 114 East First Street |
| FREDONIA | Homer Neill |
| GARDEN CITY | Kemper Auto Electric, Stevens Avenue |
| | Scheufler Supply Company |
| GOODLAND | Sherman Motor & Implement Company, 1605 South Main |
| GRAINFIELD | Grainfield Salvage & Supply Company |
| GREAT BEND | Scheufler Supply Company, 1515 Kansas Avenue |
| HARTFORD | Hurtig Implement & Hardware Company |
| HAYS | Scheufler Supply Co. |
| HOLTON | Durham & Farrell |
| HOXIE | Patmon Machine Shop |
| HUTCHINSON | Reno Implement Company, 215 South Main Street |
| INDEPENDENCE | Les Endres Service, 512 So. Park Boulevard |
| IOLA | Robinson Parts & Service, 202 N. Washington |
| JUNCTION CITY | Bowman's Farm Implement & Truck Co. 236-40 East Eighth |

| | |
|---|---|
| KANSAS CITY | AAA Engine & Electric, Inc., 405-407 Southwest Blvd |
| KINGMAN | Kingman Implement Company, 135 Ave. A., West |
| LARNED | Scheufler Supply Company, Inc. |
| LIBERAL | Magneto & Electric Company, 522 N. Kansas Street |
| LYONS | Scheufler Supply Company, Inc. |
| MANHATTAN | O. M. Jorgensen Implement Exchange<br>East end of Viaduct |
| MARION | Marion Machinery Company |
| MINNEAPOLIS | Hoover Implement Company |
| OSAWATOMIE | Kenneth R. Johnson, Oil & Gas Well Supplies |
| OSWEGE | John Sprecher Repair Shop, 1424 West 4th Street |
| PARSONS | Ervin's Auto Service, 2122 Main Street |
| PITTSBURG | W. A. Thomas Supply Company, 112 West Third |
| PLAINVILLE | Farm Implement & Supply Co., Inc. |
| PRATT | K. & W. Electric Company |
| RANSOM | Ranch Equipment Company |
| RUSSELL | Scheufler Supply Co., Inc. |
| SABETHA | Gilbert & Lortscher, 118 North Washington |
| SALINA | Beggs Super Service & Fixall Shop, 7th & Ash |
| ST. FRANCIS | Manson Electric Shop, 100 East Washington St.<br>Schlittenhardt Motor Company |
| STERLING | Meade Engine & Welding |
| SYRACUSE | East Side Garage |
| TOPEKA | Martin Tractor Company, Inc., U.S. Highway 75 So. |
| WICHITA | * Harley Sales Company, 505 South Main Street |
| WINFIELD | Biddle Engine Service, 2109 East 9th Street |

## KENTUCKY

| | |
|---|---|
| ASHLAND | Barney Williams Company |
| AUGUSTA | Richey Sales Company |
| BLOOMFIELD | Bloomfield Tractor & Supply Co. |
| BOWLING GREEN | Howell & Hunt Implement Company<br>Kirk Auto Electric Co. |
| BRODHEAD | Saylor Tractor Sales |
| CAMPBELLSVILLE | Kessler Implement Company |
| CRAB ORCHARD | Martin Implement Company |
| DANVILLE | Danville Equipment & Machine Company<br>Rouse–Triplett, Inc. |
| ELIZABETHTOWN | Hardin County Implement Company |
| FARMERS | D. R. Perry Supply Company |
| FLEMINGSBURG | Sousley & Hamm Tractor Company |
| FRANKFORT | Frankfort Automotive Machine Shop |
| FRANKLIN | Harris Feed Company |
| FREDONIA | W. M. Young Implement Company |
| FULTON | Duke's Automotive Parts Company |
| GEORGETOWN | Robey's Farm Store |
| GLASGOW | G. H. Bowles & Son |
| GREENVILLE | E. A. Cohen & Son |
| HARLAN | Womwell Automotive Parts Company |
| HARRODSBURG | Paul Shewmaker Implement Company |
| HAZARD | Womwell Automotive Parts Company |
| HENDERSON | Henderson Farmers Supply Company |
| HODGENVILLE | A. L. Hazle |
| HOPKINSVILLE | Planters Hardware Company |
| LANCASTER | H & H Farm Store<br>Sanders Supply Company |
| LEBANON | Lebanon Carriage & Implement Company |
| LEXINGTON | * Womwell Automotive Parts Co., 240 Clark Street |
| LONDON | Boggs Brothers Implement Company |
| LOUISVILLE | * Atlas Auto Parts & Grinding Company<br>1326-30 W. Jefferson Street |
| MAYSVILLE | Ellington Farm Machinery |
| MIDDLESBORO | Lyons and Cox Company |
| MONTICELLO | Hobart & Milton Roberts Implement Company |
| MOREHEAD | Monarch Supply Company |
| MORGANFIELD | McLeod Implement Company |
| MT. STERLING | Amburgey Farm Service<br>Monarch Milling & Implement Co. |
| MURRAY | McKeel Implement Company |
| NEBO | Stanley Bros. |
| NICHOLASVILLE | Central Farm Supply |
| OWENSBORO | Guenther Hardware Company<br>Owensboro Storage Battery Co |
| PADUCAH | Jones Garage & Farm Equipment |
| PARIS | Bobbitt & Hudson Implement Company |
| PIKEVILLE | Womwell Automotive Parts Company |
| RICHMOND | Cornielson-Moore Brothers |
| RUSSELL SPRINGS | Grider Motor Company |
| SCOTTSVILLE | Claypool & Weaver Implement Company<br>York & Massey |
| SHELBYVILLE | Pearce Tractor Company |
| SOMERSET | Morris Brothers |
| SUMMERSVILLE | Holman Lewis Implement Company |
| WILLIAMSBURG | Shaw Auto Parts Company |
| WILLIAMSTOWN | Pettitt Machinery Company |
| WINCHESTER | Stevenson & Delaney |

## LOUISIANA

| | |
|---|---|
| ABBEVILLE | Landry Stores, Inc. |
| ALEXANDRIA | United Electric and Magneto Service, 825 Tenth Street |
| BATON ROUGE | Alford Safe & Lock Company, 1728 Main St. |
| COUSHATTA | Cranford Farm Supply, Box 728 |
| DELCAMBRE | Dooley Bros. Machine & Welding Shop |
| DONALDSONVILLE | Castagnos Sales & Service |
| EUNICE | Dovic Fruge Repair Shop |
| FRANKLINTON | Washington Tractor Company |
| GRETNA | Gretna Specialty Sales Co., 813 – 4th Street |
| HAMMOND | Hammond Wholesale Company |
| HATTIESBURG | Carburetor & Ignition Co., 109 Green St. |
| HOUMA | Lynch's Garage |
| JENNINGS | Farm Machinery & Equipment Company, Inc. |
| LAKE CHARLES | Eagleson Lawnmower Shop, 903 Third Ave. |
| LOCKPORT | Lockport Hardware Company |
| MONROE | Southern Equipment & Tractor Company |
| NATCHITOCHES | C. E. Collins & Sons |
| NEW IBERIA | Voorhies Machine Supply Company |
| NEW ORLEANS | * Wm. F. Surgi Equip. Corp., 1017 Magazine Street |
| OPELOUSAS | J. L. Hebert Engine Sales & Service, 111 South Liberty St. |
| RAYNE | Haure Machine Shop |
| SHREVEPORT | Construction Machinery Corp.<br>Tiller Tractor & Equipment Co., 228 Airport Drive |
| WISNER | Braswell Motor Company |

## MAINE

| | |
|---|---|
| AUGUSTA | Parker Danner Company, Riverside Drive |
| HOULTON | James S. Peabody Company, Bangor Street |
| PORTLAND | Portland Tractor Company, 803 Forest Avenue |
| PRESQUE ISLE | Roy C. Thompson Company, 253 Stae Street |
| | * Diesel Engine Sales & Engineering Corp.<br>Fish Pier Road<br>Boston, 10, Massachusetts |

## MARYLAND

| | |
|---|---|
| BALTIMORE | * Phillips Mchry. & Tractor Co., 325 W. 23rd<br>C. S. Bowen Company, 2103 Greenmount Avenue<br>Brooklyn Marine Sales, 115 East York Street |
| BEL AIR | B. D. Tucker & Sons |
| BERLIN | MacMillan Brothers, S. Main Street |
| BETHESDA | G. L. Cornell Co., 4717 Miller Ave. |
| CAMBRIDGE | E. S. Hubbert & Son<br>B. J. Linthicum's Sons |
| CENTREVILLE | Jump Hardware & Implement Company |
| CHESTERTOWN | D. W. Ingersoll, Silver Hill Shop |
| CHURCHVILLE | Walter G. Coale Inc |
| CHRISFIELD | Clarence Sterling & Son<br>J. P. Tawes & Brothers |
| DEALE | Berlitz Marine Anchorage |
| EASTON | Elco Equipment Company<br>Ellicott Equipment Company |
| ELKTON | Elkton Boat Yard<br>Rogers Farm Supply Inc |
| FREDERICK | H. D. Duvall |
| GAITHERSBURG | S. F. Smith |
| GARRISON | Thomas J. Seibold Company, Reisterstown Road |

| | |
|---|---|
| HAGERSTOWN | American Growers Supply Company |
| | Downey Brothers, W. Washington Street, Ext |
| | Fearnow & Cline |
| HURLOCK | H. E. Parker & Son |
| HYATTSVILLE | Chesapeake Supply & Equipment Co |
| MILLINGTON | Julian E. Leager |
| OCEAN CITY | C. P. Cropper Fish & Oyster Company |
| POCOMOKE CITY | Pilchard Brothers |
| PRESTON | Blades & Phillips, Maryland Avenue |
| QUEEN ANNE | Jump Hardware & Implement Company |
| SALISBURY | Pilchard Brothers |
| | Salisbury Battery Company |
| SHADYSIDE | Shadyside Boat Yard |
| SILVER SPRING | Maloney's Inc |
| | National Capital Toro Inc. |
| | The Todd Company, 936 Philadelphia Avenue |
| SUITLAND | J. A. West, Jr., Suitland Esso Service |
| THURMONT | Farm Equipment Center |

## MASSACHUSETTS

| | |
|---|---|
| BOSTON 10 | * Diesel Engine Sales & Engineering Corp |
| | Fish Pier Road |
| DANVERS | Clifford T. Whittaker Company |
| HOLYOKE | Holyoke Farm Machinery Company, 115-111 High |
| HYDE PARK | Parker-Danner Company, Factory Street |
| NATICK | Robinson Farm Machinery Company |
| SPRINGFIELD | Productioneering Co., Inc., 219 Page Blvd |

## MICHIGAN

| | |
|---|---|
| ADRIAN | Arnos Farm Supply |
| AKRON | McDonald Sales & Service |
| ALBION | Fred Zeulhke |
| ALMA | Browns Auto Equipment |
| ALPENA | Schmidt Farm Equipment |
| ANN ARBOR | Auto Parts Company |
| BARCULO | Bussis Implement Company |
| BARODA | Baroda Hardware |
| BATTLE CREEK | Farm Equipment Company, 1210 E. Columbia |
| | Haddock Brothers, 19 Green Street |
| BAY CITY | O. J. Herman |
| | Sam Wieland, 801 N. Euclid Street |
| BIRMINGHAM | W. F. Miller |
| CENTERVILLE | John S. Jackson |
| CHARLOTTE | Fowler Sales Company |
| CLARE | Orville Vandawarker |
| CLAWSON | Roy Steele Equipment Company |
| CLINTON | Vaughn Implement Company |
| COLDWATER | Endicott Implement Company |
| COMSTOCK PARK | Morrissey Farm & Orchard Supply |
| CONKLIN | C. H. Ley |
| DAVISON | Amos Sales & Service |
| DECATUR | Decatur Farm Service |
| DETROIT | * R. G. Moeller Company, 14415 Meyers Road |
| DUNDEE | Karner Brothers |
| ELKTON | J. R. Quinn |
| ESCANABA | Escanaba Machine Co., 1704 Leed Street |
| | Escanaba Trading Post |
| EVART | Leach Farm Equipment Company |
| FLINT | Matthews Sales & Service |
| FOWLER | Huggett Hardware & Implement |
| FRANKENMUTH | H. J. Schluckebier |
| GRAND RAPIDS | * R. G. Moeller Company, 2564 Chicago Dr., S. W. |
| HARRISVILLE | Jensen & Healy |
| HART | Harold's Farm Implements |
| HARTFORD | Hilltop Orchards |
| HILLSDALE | Kennedy Implement Company |
| HOLLAND | Reliable Cycle Shop, 254 River Avenue |
| HOWELL | Smith Farm Equipment |
| HUDSON | Rollin Clark, Inc |
| IONIA | Lower Motor Sales |
| ITHACA | Leslie D. Reeves |
| JACKSON | Superior Sales |
| LANSING | Bert Howard Company, 1419 Turner Avenue |
| LAPEER | Lapeer Tractor & Equipment Co. |
| MANCHESTER | Earl R. Abers |
| MARLETTE | Henry Diem |
| MARQUETTE | Brebner Machinery Co. |
| McBRIDE | Parr & Son |
| MILLBURG | L. Gelder & Sons |
| MIO | Herold Hebestrait |
| MUSKEGON | H. G. Davis & Son |
| | Great Lakes Equipment Co., 1461 Evanston Avenue |
| NILES | Klute Electric |
| OWOSSO | Wieland Farm Sales |
| PONTIAC | Dicks Air-Cooled Engines, 192 S. Saginaw |
| RICHMOND | J. C. Ernst |
| ROCHESTER | Houghton & Sons |
| ST. CLAIR SHORES | D'Haem's Tool Rental |
| SANDUSKY | Robert E. Cork |
| SAULT STE. MARIE | Straits Engineering Co. |
| SCOTTVILLE | Howard Thiel |
| SOUTH HAVEN | Michigan Orchard Supply |
| SPRINGPORT | Vern Losey |
| STANDISH | Miscisin Brothers |
| STURGIS | Lake Motor Sales |
| TRAVERSE CITY | Mapleton Garage, RFD No. 1 |
| UTICA | West Utica Tractor Sales |
| | John J. Short & Son |
| WEST BRANCH | Chas. Wangler |
| WYANDOTTE | Mercer Service |
| YALE | Robert Ed Martin Implement Company |
| YPSILANTI | Rolly's Landscape Service, 3685 Morgan Road |

(Northern)
* Engine Power, Inc
Oconomowoc, Wisconsin

## MINNESOTA

| | |
|---|---|
| ALBERT LEA | Kepple Impl. Co. |
| ALEXANDRIA | M & H Motor Builders |
| AMBOY | Coulter Implement Company |
| AUSTIN | Adams Farm Equipment Company |
| BERTHA | Henry W. Harms |
| BIRD ISLAND | Wolff Motors |
| CAMBRIDGE | Krueger Bros. |
| CHASKA | Molnau Implement Company |
| CHATFIELD | Egge Impl. Co. |
| CROOKSTON | Wm. H. Ziegler Company, Inc. |
| DASSELL | Pearson Impl. |
| DULUTH | Smith-Dunn Co., Inc., 18 North 19th Avenue W |
| | Wm. H. Ziegler Company, Inc., 330 Garfield Avenue |
| ELBOW LAKE | Christianson-Shervey Company |
| FAIRMONT | M. E. Teeter |
| FERGUS FALLS | National Bushing & Parts Company |
| | C. T. Oscarson & Son |
| FERTILE | Peterson Impl. Co. |
| FOREST LAKE | Ray Jeans Impl. Co. |
| FREEPORT | Freeport Impl. Co. |
| FULDA | J. B. Janssen Implement & Aero. Service |
| GLENCOE | Tanner Implement Company |
| GRAND MEADOW | Myhre & Seim Implement Company |
| GRAND RAPIDS | Hein Implement Company |
| HALLOCK | Frank J. Bryden |
| HECTOR | C & J Motors, Inc. |
| HOUSTON | Poppe Impl. Co. |
| HUTCHINSON | C. H. Stocking Company |
| IONA | Koob Impl. Co. |
| KELLOGG | Arens Impl. Co. |
| LAMBERTON | Lamberton Implement Company |
| LISMORE | Lismore Impl. Co. |
| LITCHFIELD | Hamm's Implement Company |
| LITTLE FALLS | A. J. Smith Company |
| LUVERNE | Thone Implement Company |
| MABEL | Mabel Impl. Co. |
| MADISON | Schmidt Bros. |

| | |
|---|---|
| MANKATO | Cutkosky & Jones Company |
| | National Bushing & Parts Company |
| MARSHALL | Schrunks Garage |
| MINNEAPOLIS | * Engine Power, Inc., 1612 Lyndale Avenue North |
| | Industrial & Truck Parts, Inc. |
| | Keegan Farm Equipment |
| | Minneapolis Equipment Company 520 Second Street S. E. |
| | National Bushing & Parts Company 1221-9 Harmon Place |
| | Wm. H. Ziegler Company, Inc 2929 University Avenue S. E. |
| MONTEVIDEO | Campbell Implement Company |
| | National Bushing & Parts Company |
| MORGAN | Morgan Impl. Co. |
| MORRIS | Swenson Implement Company |
| NEW ULM | Clauss Implement Company, Inc |
| OLIVIA | M. W. Hertel Company |
| OWATONNA | C. J. Ost Farm Implement Company |
| PIPESTONE | Walkup |
| PLAINVIEW | Schultz Impl. |
| PRESTON | Preston Iron Works |
| RED WING | National Bushing & Parts Company |
| REDWOOD FALLS | Fall Implement Company |
| ROCHESTER | National Bushing & Parts Company |
| | Swenson Implement Company |
| ROGERS | Otto J. Scharber & Sons |
| SAINT CLOUD | National Bushing & Parts Company |
| SAINT JAMES | Wick Implement Company |
| ST. PAUL | R. L. Gould & Company, 500 Jackson Street |
| SLEEPY EYE | Bruggeman Co. |
| SPRING GROVE | Foss Motor Sales |
| STEPHEN | Koser & Jergenson Impl. |
| THIEF RIVER FALLS | Taxeraas Implement Company |
| TRACY | Tracy Implement Company |
| WARREN | Erickson & Carlson |
| WASECA | Waseca Implement Company |
| WELLS | Wm. Moll & Sons |
| WENDALL | Christianson-Shervey Company |
| WILLMAR | John Peterson Implement Company |
| WILMONT | Johanning Impl. Co. |
| WINDOM | Andrew Implement Company |
| WINONA | F. A. Krause Company |
| WORTHINGTON | Western Implement Company |
| ZUMBROTA | A. E. Collinge & Son |
| | * Engine Power, Inc Oconomowoc, Wisconsin |

## MISSISSIPPI

| | |
|---|---|
| AMORY | Dalrymple Equipment Company |
| CLARKSDALE | Wilson Tractor Company |
| CLEVELAND | West Implement Company |
| COLUMBUS | Joe's Auto Electric Company |
| GREENVILLE | Thompson Battery & Electric Company |
| GREENWOOD | R. M. Brown Implement Company |
| INDIANOLA | Indianola Tractor Company |
| JACKSON | Taylor Machine Works, Box 1013 |
| LELAND | Ayres Company |
| LOUISVILLE | Taylor Machine Company |
| MACON | Noxubee Implement Company |
| MARKS | Marks Tractor Company |
| MERIDIAN | Kelley-Williams Co. |
| NATCHEZ | Hammett Supply Company |
| PASCAGOULA | Gulf Marine Ways, Inc., P.O. Box 239 |
| PHILADELPHIA | Moore Hardware & Implement Company |
| STARKSVILLE | Rackley Walker Equipment Co |
| TUPELO | Coley-Johnson Implement Company |
| WEST POINT | Moseley Implement Company |
| | * Lewis Diesel Engine Company 92 West Carolina Memphis, Tennessee |

(Continued)

| | |
|---|---|
| | * Wm. F. Surgi Equipment Company 1017 Magazine Street New Orleans, Louisiana |

## MISSOURI

| | |
|---|---|
| BETHANY | Beeler Implement Company |
| BOLIVAR | Butler Implement Company |
| BOONVILLE | Boonville Equipment Co., 509 Sixth Street |
| BUTLER | Deems Farm Equipment Co. |
| CAPE GIRARDEAU | Schneider Equipment Company Highway 61 & Bloomfield Road |
| CANTON | Canton Implement Company |
| CARTHAGE | Jacobs Implement Company |
| CENTRALIA | Centralia Implement Company |
| CHARLESTON | French Implement Company |
| CHILLICOTHE | Kaye Implement Company |
| CLAYTON | Lawrence J. Meisel Co., 444 South Brentwood |
| CLINTON | Mansfield's |
| COLUMBIA | Lance D. Henderson Implement Company |
| CUBA | Rector Tractor Sales |
| DEXTER | Dexter Motor & Implement Company |
| DONIPHAN | Doniphan Implement Co |
| EAST PRAIRIE | French Implement Company |
| FLORISSANT 21 | Casper Jost & Sons, Rt. 2, Box 318, New Halls Ferry Rd. |
| HANNIBAL | Harrison Motor Company, 3716 McMaster Avenue |
| HARRISONVILLE | Harvey Implement Company |
| HOUSTON | W. T. Scheets Imp. Co. |
| JEFFERSON CITY | Raithel Implement Company, 605 Mulberry Street |
| JOPLIN | Dave's Magneto Service, 1702 W. 3rd |
| KANSAS CITY | * A. A. Klughartt Machinery Company 1205 Woodswether Road |
| KEWANEE | Farm Implement Company |
| KIRKSVILLE | Mitchell Implement Company |
| LEE'S SUMMIT | Payne Machinery Service |
| LOUISIANA | Farm Supply Company, 3rd & Alabama |
| MACON | Strong Equipment Company |
| MALDEN | The Stokes Motor & Implement Company |
| MEXICO | Huges & Long Equip. Co., 1103 Highway 15 |
| MARSHALL | Whitlock Coal & Implement Company |
| MONTGOMERY CITY | Ray Oliver |
| MT. VERNON | Charles-Meyer Implement Co. |
| OWENSVILLE | Ruffner Chevrolet Co. |
| PALMYRA | Vaughn & Burge Implement Co |
| PARIS | The Paris Tractor & Equipment Company |
| PERRYVILLE | Prost Implement Company |
| PLATTSBURG | Long Farm Supply Company |
| POPLAR BLUFF | Miller Tractor & Implement Company |
| ST. CHARLES | Boschert Tractor & Implement Co., 2200 N. Third Street |
| ST. JOSEPH | Farm Supply Company |
| ST. LOUIS | * Allied Construction Equipment Company 4015 Forest Park Avenue |
| | Atlas Lawn Equipment Co., 9761 Olive St. Road |
| | Forest Park Lumber & Supply Company 6325 Clayton Avenue |
| | Chas. G. Kruckemeyer Machine & Parts Company 1365-77 Cockrill Street (Wellston) |
| STE. GENEVIEVE | Roth Implement Company |
| SALEM | Floyd Brothers Implement Company |
| SEDALIA | M. F. Wahrenbrock Implement Company 1301 South 65 Highway |
| SHELBINA | Marvin O. Jones |
| SIKESTON | DeKriek Farm Equipment Co., Highway 60 East |
| SILEX | Mudd Equipment Company |
| SPRINGFIELD | Engle Implement Company |
| TRENTON | Tractor Sales & Service |
| TROY | Cope Tractor & Equipment Co |
| WARRENTON | Myers Implement Company, Route 2 |
| WASHINGTON | Stoenner Farm Equipment Company |
| WAYLAND | Wilson Implement Company |
| WENTZVILLE | Heady Equipment Company |
| WEST PLAINS | H. A. VanderTook's Garage |

## MONTANA

| | |
|---|---|
| BILLINGS | * Midland Implement Company, Inc |
| | Cooper–Hustad Tractor Co. |
| CHESTER | Tiber Tractor Company |
| DILLON | Berger Cochran Motors |
| FAIRFIELD | Hughes Implement Company |
| FORSYTH | Wallin Mercantile Company |
| GLENDIVE | Kampschror Implement Co. |
| GREAT FALLS | Johnson Farm Equipment, Inc. |
| | Midland Implement Company, Inc |
| HARLOWTOWN | Central Garage |
| HAVRE | Viaduct Implement Company |
| HELENA | Steffeck Equipment Company |
| KALISPELL | Modern Equipment Company |
| | Stedje Brothers |
| LEWISTOWN | Parrish–Horning Implement Co. |
| LODGE GRASS | Don's Farm Service |
| MILES CITY | Miles & Ulmer |
| MISSOULA | Bedford Implement Company |
| SHELBY | K & T Implement |
| SHERIDAN | Halse Motors |

## NEBRASKA

| | |
|---|---|
| BEATRICE | Henderson Farm Equipment Company |
| BLOOMFIELD | M & L Implement Company |
| BROKEN BOW | Pirnie Bros. |
| CENTRAL CITY | Glantz Implement |
| CHADRON | Chadron Implement |
| CLARKSON | Joe Vacin |
| COLERIDGE | Gene's Blacksmith Shop |
| COLUMBUS | Ewert Motors & Implement |
| FALLS CITY | Bauer Implement Company |
| FREMONT | Midwest Farm Equipment |
| GENEVA | Chaney Implement |
| GERING | Ted B. Miller Company |
| GOTHENBURG | Lepp & Osterloh |
| GRAND ISLAND | Midwest Farm Equipment |
| HARTINGTON | Schulte Bros. |
| HASTINGS | Sherman Service Center |
| HEMINGFORD | Burney Bros. Implement |
| HILDRETH | Schwartz Bros. |
| HOLDREGE | Bierman Service |
| KIMBALL | Rohrbaugh Farm Equipment |
| LEXINGTON | Ray's Repair Shop |
| LINCOLN | * Port Huron Machinery & Supply Company |
| | 801-813 'Q' Street |
| LYONS | Hans Nelson Implement & Garage |
| McCOOK | Kleins Motor & Electric |
| NELIGH | Breyer Implement Company |
| NORFOLK | Spangenburg Implement |
| NORTH PLATTE | Schlientz Implement |
| ODELL | Callan Hardware & Implement |
| OMAHA | American Auto Service, 1116 Jackson Street |
| ORD | O. A. Kellison Company |
| PIERCE | Kolterman Service Company |
| SCHUYLER | Hamata Bros. |
| SCOTTSBLUFF | Brubaker Tractor Company |
| SIDNEY | Larson Machinery Co. |
| SPRINGFIELD | Iske Implement |
| SUTTON | Jacob Bender & Son |
| VERDIGRE | Henry Prokop |
| WAKEFIELD | Schroeder's Store |
| WALTHILL | Dale Benter |
| WAYNE | Wayne Implement Company |
| WEST POINT | Zobel Farm Store |
| WISNER | Severson Implement |
| YORK | Dobler Service |

## NEVADA

| | |
|---|---|
| ELY | Nevada Equipment Company |
| FALLON | I. H. Kent Company |
| LAS VEGAS | Blystone Equipment Co., 1711 Fremont Avenue |
| | Failing's Industrial Service, 911 S. Main Street |
| RENO | Sierra Machinery Company, 307 Morrill Avenue |
| WELLINGTON | Smith Valley Garage & Implement Company |
| YERINGTON | Lommori Bros. |
| | * Arnold Machinery Company, Inc |
| | 433 West Second South Street |
| | Salt Lake City, Utah |
| | * Continental Sales & Service |
| | 3817 South Santa Fe Avenue |
| | Los Angeles, California |
| | * E. E. Richter & Son |
| | 5725 Hollis Street |
| | Emeryville, California |

## NEW HAMPSHIRE

| | |
|---|---|
| CONCORD | New Hampshire Explosives & Machinery Company |
| | 261 S. Main Street |
| MANCHESTER | Dunbar Farm Equipment Co., 340 Massabesic Street |
| WALPOLE | R. N. Johnson, Inc., Bellows Falls Road |
| WEST LEBANON | Noble-Belisle Machinery, Inc |
| | * Diesel Engine Sales & Engineering Corporation |
| | Fish Pier Road |
| | Boston 10, Massachusetts |

## NEW JERSEY

| | |
|---|---|
| BELMAR | Heyniger Brothers Inc., State Highway 35 |
| BLAWENBERG | J. Percy Van Zandt |
| BRANCHVILLE | The Roy Company |
| CAMDEN | Harry K. Pape & Sons, 1427 Haddon Ave. |
| DEERFIELD | Farmers Supply Co. |
| FLEMINGTON | * John Reiner & Company, State Hwy 30 |
| FREEHOLD | Sidney W. Reid, Rt. 4 – State Highway |
| HIGHLAND PARK | Kish Brothers, 179 Woodbridge Avenue |
| HIGHTSTOWN | Hights Farm Equipment |
| HILLSIDE | H. J. Zoubek Company, Ramsey Avenue & Bley Street |
| LINWOOD | Seaview Auto Repairs |
| MT. HOLLY | Cooney's Welding & Machine Shop |
| NEWARK | Bell Magneto Service, 191 Second Street |
| | Henry's Company, 376 High Street |
| PHILLIPSBURG | Paul M. Souders, R. D. 2 |
| RIVERTON | Riverton Farm Equipment Co. |
| WESTFIELD | Storr Tractor & Equip. Company, 469 South Avenue |
| WILLIAMSTOWN | Weed's Sharpening & Repair Service |
| | 54 Poplar St. & Black Horse Pike |
| | * Service Supply Corporation |
| | 20th & Venango Streets |
| | Philadelphia, Pennsylvania |

## NEW MEXICO

| | |
|---|---|
| ALBUQUERQUE | Central Supply Co., 808 Second St. NW. |
| | Contractors' Equipment & Supply Company |
| CARLSBAD | Young Implement Company |
| CIMMARRON | Cimmarron Mercantile Company |
| CLOVIS | Bline Machinery Co. |
| DEMING | Dunnes Automotive |
| FARMINGTON | Justis Supply Company |
| HOBBS | Union Supply Company |
| | West Texas Sales Company |
| ROSWELL | Savage Brothers Electric |
| | * Central Equipment Company |
| | 1435 Market Street |
| | Denver, Colorado |

## NEW YORK

| | |
|---|---|
| AMSTERDAM | Shelp & Warner Company, 24 River Street |
| AVON | Mark J. Davin |
| BOLIVAR | J & C Magneto, 85 Boss Street |
| BUFFALO | Fox Equipment Co., 242 Hopkins Street |
| CANANDAIGUA | Donald Howard |

| | |
|---|---|
| ENDICOTT | Newing Equipment Co., 703 Main Street |
| HIGHLAND | W. E. Haviland & Company, Bridge Circle |
| HOMER | A. B. Brown & Son |
| HORSEHEADS | Hansen's Sales & Service, Ithaca Road |
| ITHACA | Allen Tractor & Equipment Service |
| | 901 West Buffalo Street |
| MIDDLEPORT | Clayton & Dickinson, Johnson Creek |
| NEW YORK CITY* | John Reiner & Company |
| | 12-12 – 37th Avenue, Long Island City |
| OWEGO | Herbert M. Petzold Equipment Co., 5th Ave, Route 17C |
| PINE ISLAND | Roy Brothers |
| POUGHKEEPSIE | J. E. Andrews Hardware Company, 279 Main Street |
| RENSSELAER | Van's Equipment Sales, Inc., Route 9 |
| ROCHESTER | Keystone Builders & Supply Company, 85 Palm Street |
| SCOTIA | Scotia Machine & Tool Co., Inc., 8 John St. |
| SYRACUSE * | John Reiner & Company, 726 W. Hiawatha Blvd |
| | Atlantic Tug & Equipment Co., 180 Erie Blvd. E. |
| | Engine Parts Warehouse, 932 North Salina St. |
| WATERLOO | Finger Lakes Equipment Company |
| WATERTOWN | Northern Implement Company, 215 Coffeen Street |
| YORKSHIRE | Yorkshire Equip. Co., Inc. |

## NORTH CAROLINA

| | |
|---|---|
| AHOSKIE | L. S. Jernigan & Son |
| ASHEBORO | Southern Motors & Equipment Company |
| ASHEVILLE | Fitzpatrick & Sons |
| BATTLEBORO | M. C. Braswell Co. |
| BEAUFORT | Barbour's Marine Supply Company |
| BELHAVEN | Latham Equipment Company |
| BETHEL | M. O. Blount & Son |
| BURLINGTON | C. T. Foster Machinery Co. |
| CHARLOTTE | Contractors Service, Inc |
| | H. B. Owsley & Son |
| | C. S. Proctor Implement Company |
| | E. J. Smith & Sons Company |
| CHINA GROVE | Eddleman Machine & Cycle Shop |
| DUNN | Johnson Cotton Company |
| DURHAM | Colvard Equipment Co. |
| ELIZABETH CITY | Neece Tractor Co. |
| ENFIELD | Anderson Tractor & Implement Co. |
| FARMVILLE | Farmville Implement Company |
| FAYETTEVILLE | Proctor-Barbour Company |
| FUQUAY SPRINGS | Procter-Barbour Company |
| GOLDSBORO | Johnson-Sherman |
| GRANITE FALLS | F. L. German Motor Company |
| GREENSBORO * | E. F. Craven Company |
| GREENVILLE | Allen Implement Company |
| | R. R. McLawhon & Sons |
| HAMILTON | Everett-Mattews Equip. Company |
| HENDERSONVILLE | Francis & Wright, Inc |
| KINSTON | Johnson-Sherman Company |
| LENOIR | Sharpe Auto Repairs |
| LEXINGTON | Leonard Machine Shop |
| LINCOLNTON | Motor Service, Inc. |
| LUMBERTON | Johnson Cotton Company |
| MONROE | McGee Tractor & Equipment Co., Walkup Avenue |
| NEW BERN | S. T. Roach Machinery Company |
| OXFORD | Morton-Sherman Implement Company |
| PLYMOUTH | Miller Warren Implement Co. |
| RALEIGH | S. M. Crocker & Son |
| ROCKY MOUNT | Johnson Cotton Company |
| SANFORD | Mann Implement Company |
| SCOTLAND NECK | Mitchiner Truck & Tractor Company |
| SELMA | Floyd C. Price & Sons |
| SHELBY | O. E. Ford Company |
| STATESVILLE | Watts & White Machine Company |
| SWANSBORO | Casper Marine Service |
| WADESBORO | Teal Implement Company |
| WALLACE | Johnson Cotton Company |
| WASHINGTON | Beaufort Equipment Co. |
| | W. C. Mallison & Son |
| WHITEVILLE | S. L. Fuller & Company |
| WILLIAMSTON | Reddick Equipment Company |
| WILMINGTON | Marks Machinery Company |
| WINSTON-SALEM | Etchinson Machine Works |

## NORTH DAKOTA

| | |
|---|---|
| ASHLEY | Ashley Implement Company |
| BARNEY | Barney Auto Service |
| BELFIELD | Belfield Farm Equipment |
| BEULAH | Unruh Garage |
| BISMARCK | Bismarck Farm Equipment |
| | Western Auto Parts Company |
| | Irv. Young's Farm Stores |
| BOTTINEAU | Bottineau Implement |
| | Charnholm Motor |
| BOWBELLS | Bowbells Hardware & Implement Company |
| CARRINGTON | Nichelson & Carr |
| CENTER | Fandrich Sales and Service |
| COOPERSTOWN | Farmers Oil Co. |
| | Griggs County Implement |
| CROSBY | Crosby Motor |
| | Gubrud Implement |
| DEVILS LAKE | Western Auto Parts Company |
| DICKINSON | Western Auto Parts Company |
| DRAKE | Alme Implement |
| DUNN CENTER | Dunn Center Motor |
| ELGIN | Laub Motor Sales |
| ELLENDALE | Anderson Bros. |
| FARGO * | Western Auto Parts Company |
| | Farmotors, Inc. |
| FESSENDEN | Wells County Implement |
| FORMAN | Sargent County Implement |
| GLEN ULLIN | Curfew Elev. Company |
| GOODRICH | Goodrich Machine |
| GRAND FORKS | Myhra Equipment |
| | Western Auto Parts Co. |
| HARVEY | G. H. Nelson |
| HEBRON | Wolter's Supply |
| HILLSBORO | Ashaldn & Forbes |
| HUNTER | I. Moen Imp. Company |
| JAMESTOWN | Western Auto Parts Company |
| KENMARE | Greger Brothers |
| KINDRED | Berkely Implement |
| | Kindred Imp. Co. |
| LANGDON | LeBrun Implement |
| LIDGERWOOD | Lidgerwood Imp. Co. |
| LINTON | Linton Auto & Implement |
| | Schatz Implement Co. |
| LISBON | Holt Motors |
| LITCHVILLE | Opdahl Motors |
| MADDOCK | General Supply |
| | Maddock Implement Company |
| MAKOTI | Larson Implement |
| MANDAN | Western Auto Parts Company |
| MAYVILLE | Moen Implement |
| McCLUSKY | Sheridan Company Implement |
| McVILLE | Berg Implement |
| MINOT | Waterman Implement |
| | Western Auto Parts Company |
| NAPOLEON | Tony Kuntz Implement |
| | Wentz Farm Supply |
| NEW ENGLAND | New England Implement |
| NEW ROCKFORD | Page Brothers |
| | Rockford Oil Company |
| OAKES | Emil Tedin |
| PAGE | Ruthford Hardware |
| PARSHALL | Parshall Tractor & Implement |
| REGENT | Farmers Union Oil Company |
| RUGBY | Gronvold Motor |
| STANLEY | Solberg Implement |
| STEELE | Wildfang Miller Motor |
| TOWNER | Towner Supply |
| UNDERWOOD | Spielman Implement |

| | |
|---|---|
| VALLEY CITY | Far Motor, Inc |
| VELVA | Leinhard Motors |
| WAHPETON | Ed. Loll & Sons |
| WALHALLA | Harvey Motor Sales |
| WASHBURN | Hoffman Implement Company |
| | Wicklander Machine |
| WATFORD CITY | Dotzgnrod Implement Co. |
| WILLISTON | Western Auto Parts Company |
| WILLOW CITY | C. G. Emery |
| WILTON | Thompson Implement |
| WISHEK | Vassler Implement Company |
| WYNDMERE | Dontzenrod Implement Co |

## OHIO

| | |
|---|---|
| AKRON | Beltz Farm & Garden Supply |
| | Gauer Service & Supply |
| ARCANUM | Hency Farm Service, 108 East South Street |
| ASHTABULA | Friend Automotive Sales & Service |
| BALTIC | Farmerstown Machine Company |
| BARNESVILLE | Kennedy Farm Equipment |
| BATAVIA | Anstaett Farm Service |
| BELLEVUE | Danklefsen Tractor & Implement Sales |
| BENTONVILLE | Bentonville Tractor Company |
| BIRMINGHAM | Howe & Bickel |
| BOWLING GREEN | The Banting Company |
| CADIZ | Mine Supplies, Inc. |
| | Sinclair Farm Store |
| CAMBRIDGE | Gibson Supply Company |
| CANFIELD | C. O. Probst |
| CANTON | Linder Bros. Farm Equipment, R. D. 3 |
| CALDWELL | Noble Tractor Sales |
| CHILLICOTHE | Grimes Implement Co. |
| CINCINNATI | * Cincinnati Engine & Parts Co., 2525 Vine Street |
| | Highway Equipment Company, 2150 Langdon Farm Road |
| | Van Atta Seed Company |
| CIRCLEVILLE | Wood Implement |
| CLEVELAND | Brooklyn Tractor & Mower Co. |
| | Continental Cleveland Corp. |
| | Day & Maddock Co. |
| | Ernest F. Donley's Sons, Inc., 10203 Miles Avenue |
| | Farm Supplies & Power Equipment |
| | Industrial Engine Parts, Inc |
| | W. T. Walsh Equipment Company, Inc |
| | George P. Williams Equip. Co. |
| COLDWATER | Dues Imp. Sales |
| COLUMBUS | A. E. Buck Sales & Service |
| | Lorenz Equipment Co. |
| | Ohio Auto Parts Company |
| | R. E. Woodin Sales Co. |
| COSHOCTON | F. D. McIntosh, 622 Main St. |
| CYGNET | Clift Implement Service |
| DAYTON | Flack Equipment Company |
| DELAWARE | Hart Implement Co. 36 N. Union Street |
| DELPHOS | Delphos Implement Store |
| DOVER | Brinker Supply |
| EAST PALESTINE | Rockenberger Motor Parts Service |
| EDISON | Bolinger Implement Co. |
| EDON | Wolff's Tractor Service |
| ELYRIA | Pritts & Fulner |
| FINDLAY | Evans Farm & Industrial Sales |
| FREMONT | Goodman Equipment |
| GALENA | John W. Shultz Sales & Service |
| GALION | Galion Farm Service, Inc., 322 S. Market Street |
| GREENVILLE | Harshbarger Imp. Co. |
| HAMILTON | Daniels Oliver Store, P. O. Box 831 |
| HARRISON | Strimple Implement Company |
| HILLSBORO | N. N. Sams & Son |
| JACKSON | Jackson Implement Co. |
| KENTON | McFadden Implement Company |
| LANCASTER | Lifer Farm Supply |
| LEBANON | McCurley Implement Company |
| LIMA | Lima Flack Co., 1420 Elida Avenue |
| LISBON | Diesel Service |
| LOGAN | Fred Hack |
| LONDON | Martin Farm Supply, 67 N. Central Street |
| MANSFIELD | Lust Implement Company, 140 N. Main Street |
| MARIETTA | Marietta Ignition Service Sta., 181 Front Street |
| MARION | * McCune & Company |
| | Dutt Implement Store |
| McCLURE | McClure Sales & Service |
| MENTOR | Earl Ives Equipment Co., 1585 Mentor Avenue |
| MIDDLETOWN | Schrock's, Inc., 801 Yankee Rd. |
| MINSTER | Streacher's, 19 S. Main Street |
| MT. STERLING | Emrick Implement Company |
| NAVARRE | The Farmers Supply Company |
| NEWARK | Wilkin Farm Store, 21 N. 4th Street |
| NEW LEXINGTON | Householder Tractor Supply |
| NEW LONDON | Stones |
| NEW PHILADELPHIA | Scott Supply |
| | Twin City Equipment Co. |
| NORTH FAIRFIELD | Underwood Case Sales & Service |
| NORWALK | Curtiss A. Shur, State Route 18 East |
| OAK HARBOR | Oak Harbor Farm Supply, 300 W. Water |
| OXFORD | Oxford Service Station |
| PLAIN CITY | Plain City Implement |
| PORTSMOUTH | Drummond Implement Company |
| RICHWOOD | Hamilton Equipment Co. |
| RUSSELLVILLE | Russellville Implement Company |
| ST. CLAIRSVILLE | Efaw Electric & Radiator Co. |
| SANDUSKY | Motor Equipment Sales, Inc. |
| SIDNEY | Boyer Farm Supply |
| SOUTH ZANESVILLE | Zanesville Rubber & Supply, 71 Maysville Street |
| SPRINGFIELD | Springfield Tractor Sales, Inc. |
| STEUBENVILLE | Voto Mfg. Sales Company |
| SUNBURY | Clark Tractor Sales |
| TIFFIN | Eickhorn Implement Store, N. Sandusky Street |
| TOLEDO 4 | Flack Equipment Company, 235 Broadway Avenue |
| | The Banting Company, 1150 Central Avenue |
| | The Girkins Electric Company |
| TROY | Snyder and McDonald Garage |
| UNIONTOWN | Drake Bros. Gravely, Inc., R.D. No. 1 |
| UPPER SANDUSKY | Schmidt Machine Company |
| VAN WERT | Van Wert Tractor Sales |
| WAPAKONETA | Streacker's |
| | White's Garage |
| WASHINGTON C.H. | Washington Implement Company |
| WESTLAKE | Bradley Supply Co. |
| WESTVILLE | Smith Farm Equipment |
| WILMINGTON | C. M. Hale |
| WOOSTER | Wooster Farm Equipment |
| XENIA | King Tractor Sales |
| YOUNGSTOWN | * McCune & Company, 3721 Mahoning Avenue |
| | E. E. Emery Auto Parts, Front Street |
| ZANESVILLE | Gillogly Stores, 150 Underwood St. |
| | * Eagle Machine Company, Inc |
| | 635 E. Market Street |
| | Indianapolis, Indiana |

## OKLAHOMA

| | |
|---|---|
| ADA | Theimer Implement Company, 527 West 12th St. |
| ALTUS | Clevenger Electric Service |
| ALVA | Devery Implement Company |
| ARDMORE | Stolfa Brothers, 15 East Main |
| ATOKA | Setliff Implement Company |
| BLACKWELL | Jack's Engine Service, 1605 So. 2nd St. |
| BRISTOW | Westover Implement Company |
| CLINTON | Fred W. Wagner, Sales & Service |
| CUSHING | DeJarnett Battery & Electric Company |
| DEWEY | Star Machine Works |
| DUNCAN | Motor Parts & Service, 209 North 7th Street |
| DURANT | Durant Implement Company, 417 North First St. |
| ENID | Art's Machine Shop, 412 N. Independence |
| GUYMON | Claycomb Electric Company |
| HEALDTON | Lewis Magneto & Ignition Company |
| HOLDENVILLE | H. D. Maloy Implement Co., 111 S. Creek Street |
| HUGO | Hugo Implement Company |

| | |
|---|---|
| LAWTON | Lawton Machine Shop |
| LEXINGTON | Oscar Standridge Supply |
| LINDSAY | Garrett Engine Service, 119 North Main Street |
| McALESTER | Gene Jackson Farm Machinery, 417 South Second St |
| MUSKOGEE | Warren Kelly Machinery Company, 222 North Cheroke |
| MIAMI | Standard Auto Parts Company |
| NOWATA | Keystone Supply Company |
| OKLAHOMA CITY | Wylie-Stewart Machinery Company, Inc 1400 Exchange Avenue |
| PAULS VALLEY | Jackson Machine Shop |
| PERRY | Wurtz & Wurtz Motor Company, 624 Elm Street |
| SEMINOLE | Magneto Ignition Company |
| SHAWNEE | Crawford Products Company, 320 N. Broadway |
| SNYDER | Snyder Implement Company |
| STILLWATER | Fritz Auto Electric, 420 Main Street |
| TULSA | * Harley Sales Company, 319 Tri-State Building |
| VINITA | P. K. Welding Supply, 823 West South Avenue |
| WARWICK | Seaba Mfg. Company, Inc. |
| WEWOKA | Clair Robbins Pontiac, 214–20 Mekusukey |
| WOODWARD | Herd Equipment Co., 1124 North Main St. |

## OREGON

| | |
|---|---|
| ALBANY | Herrold & Jensen |
| COOS BAY | Williamson's Outboard Shop, Box 1011 |
| CORVALLIS | Corvallis Implement Company |
| EUGENE | F. K. Brewer Sales & Service, 1305 W. 6th St. |
| | E. O. Drake, 1457 W. 6th St. |
| GRANTS PASS | Hubbard-Wray Co., 618 E. H Street |
| HILLSBORO | Roy W. Heinrich |
| KLAMATH FALLS | Crater Lake Machinery |
| MEDFORD | Cal.–Ore. Machinery, 944 S. Central |
| | Davenport & Town, 808 S. Riverside |
| NORTH BEND | Bob's Magneto & Repair |
| ONTARIO | Nicholson Service & Supply Company |
| | Meeker Taylor Tractor |
| PORTLAND 9 | * Andersen Machinery, 401 N. W. 4th Ave. |
| ROSEBURG | Douglas County Co-op. |
| SALEM | Baldwin-Mount, 3755 Silverton Rd. |

## PENNSYLVANIA

| | |
|---|---|
| ALBION | John Duda |
| ALIQUIPPA | Walters Farm Service, R. D. 1 |
| ALTOONA | Maximon Machine Co., 801 N. Logan Blvd. |
| ANNVILLE | Weaver's Farm Service, R. D. 1 |
| ANSELMA | Nevin Myers |
| BEAVERTOWN | Carl H. Thomas |
| BEDFORD | Koontz Equipment & Supply Co., Pitt Street |
| BELLEFONTE | Knepp Tractor Sales |
| BELLEVILLE | Samuel Crissman Service Station |
| BERNEVILLE | Stanley Klopp |
| BERWICK | Claude H. Rinehimer, R. 1 |
| BIGLERVILLE | Adams County Fruit Packing Company |
| | L. W. and M. S. Kleinfelter |
| | O. C. Rice & Son |
| | Wolfe's Farm Service |
| BIRD-IN-HAND | J. U. Neuhauser & Sons |
| BRADFORD | Bradford Supply & Equipment Co., 130 Main Street |
| BUTLER | Hindman Farm Supply |
| CARLISLE | C. H. Line, R. D. 4 |
| | Ernest Shover, 19 West South Street |
| CHAMBERSBURG | Paul Byers |
| CHURCHTOWN | Fred H. Yoos Garage |
| CLARION | Furlong Service |
| CLARKS SUMMIT | Frank McCormick Farm Equipment |
| CLEARFIELD | Clearfield Equipment Company |
| | Gray Storage Battery Co., 110 N. Third Street |
| COLLEGEVILLE | Ervin Shainline |
| CONNELLSVILLE | Back Creek Lumber Company |
| CORSICA | Clair Kennedy, Box 12 |
| DALLAS | Woolbert, Howard Lawn Equipment, Memorial Highway |
| ELIZABETHTOWN | Elizabethtown Farmer's Supply |
| ERIE | Jorgenson's Garage, 1925-1929 W. 26th Street |
| FAIRFIELD | Fairfield Garage (C. L. Sheads) |
| FARMERSVILLE | Farmersville Equipment Company |
| FLICKSVILLE | Vough Repair Shop |
| GILBERT | A. E. Krome |
| GREENCASTLE | Meyers Implement Co., R. D. 1 |
| GREENSBURG | Shaffer Implement Company, R.D. 6, West Newton Ro |
| HANOVER | Sheetz Bros. |
| | W. L. Sterner, 516 Frederick Street |
| HARRISBURG | Highway Equipment Company, 5100 Paxton Street |
| HAZLETON | * Lancaster Engineering Corp., 3002 North Church Stre |
| | Hazleton Machinery & Equipment Company |
| HERSHEY | Hershey Estates |
| INDIANA | H. D. Fair Store, 329 N. 4th Street |
| INTERCOURSE | Charles Hoober |
| JOHNSTOWN | Reed-Wither Farm Implement Co |
| KINZER | Arthur Young Company |
| KIRKWOOD | L. E. Book |
| KITTANNING | White's Farm Supply |
| KUTZTOWN | Harry Knittle |
| LANCASTER | Bart's Repair Service, R. D. 5 |
| | L. H. Brubaker, R. D. 4 |
| | Herr The Pump Man, 211 Ann Street |
| LAURELDALE | Joe's Hobby Shop, 3407 Chestnut Street |
| LEBANON | Krall Battery & Ignition Company, 5th & Cumberland |
| | Elmer Plasterer, R. D. 5 |
| LEMOYNE | Capitol Equipment Company |
| | Shaull Equipment Co. |
| LEWISBURG | Ziegler, J. S., R. D. |
| LITITZ | L. H. Brubaker, R. D. 4 |
| | D. L. Diem & Sons |
| LIVERPOOL | Samuel Kurtz Garage |
| MARTINSBURG | Forshey's Feed & Grain Company |
| McCLURE | Will & Wagner |
| McELHATTAN | Roy G. Rich & Son |
| MEADVILLE | H. E. Lutz & Son |
| MECHANICSBURG | American Equipment Company |
| MERCER | Mercer County Implement Company |
| MERCERSBURG | George H. Mellott Implement Co., R. D. 2 |
| MONTOURSVILLE | Keebler's Feed & Farm Supply |
| MORGANTOWN | Mountz Welding Company |
| MOUNT JOY | J. B. Hostetter & Son |
| NEW CASTLE | Travers Construction Company |
| NEW HOLLAND | A. B. C. Groff |
| | Hochstetler's Magneto Service, 243 E. Franklin Street |
| | Snavely's Farm Service |
| NEW PROVIDENCE | Walter McVey |
| NORRISTOWN | Modern Lawn Mower Shop |
| | Edgar E. Stem |
| ORWIGSBURG | Paul J. Eichert |
| PALMYRA | Dechert's Machine Shop |
| PHILADELPHIA | * Service Supply Corporation 20th & Venango Streets |
| | Allied Engineering Equip. Co., 4159 Main St., Manayun |
| | Foss Contractors Equipment Co., Race St. |
| PHILIPSBURG | Ginters Machine Shop |
| PITTSBURGH | * Contractors Equipment Service Company 1415 Brighton Road, N. S. |
| POTTSVILLE | Ost & Ost, 13th & Laurel Streets |
| READING | Auto Parts Company, 40 S. 4th Street |
| | Berkleigh Tractor Division, Seaman Mill Supplies, 826 Franklin Street |
| | Geo. D. Lessig & Son, 763 North 12th Street |
| | Richard Rickenbach, R. 2 |
| RED LION | Lester E. Sentz, R. D. 3 |
| REINHOLDS | Warren Harting |
| RONKS | Lester Singer |
| RUMMERFIELD | C. B. Eastabrook & Son, R. D. 1 |
| RUSSELLVILLE | Thomas H. Carr |
| ST. MARY'S | St. Mary's Super Service |
| SALUNGA | R. D. Brubaker |
| SAXTON | George E. Brown Welding Shop |
| SCRANTON | Penn Auto Parts Co., 606 S. Washington Avenue |
| SELINSGROVE | W. F. Woodling & Son |
| SELLERSVILLE | Edward Gulden Service, West Park Ave. |

| | |
|---|---|
| SEVEN VALLEYS | Gus's Garage (Aussie Strausbaugh) |
| SHIPPENSBURG | John Heberling |
| | Meyers Farm Supply Co. |
| SILVERDALE | I. G. Rosenberger Company |
| SPRING HOUSE | Alvin G. McClellan, Route 309 |
| SPRINGS (Somerset County) | Miller Brothers |
| STEWARTSTOWN | Robert Sweeney |
| SUNBURY | Moyer's Woodworking Co., 133 Pine Street |
| TOWER CITY | Tallman Bros. |
| TUNKHANNOCK | Bartron Farm Supply |
| | Gay-Murray Company |
| VERONA | Oakmont Motor Supply, 733 E. Railroad Avenue |
| WARFORDSBURG R.D. | Frank M. Peck |
| WAYNESBORO | Shaffer Sales & Service, 253 North Garfield Street |
| | Stouffer Tractor Mower Co. |
| WAYNESBURG | Long Tractor Sales, Porter Street |
| WILKES-BARRE | Ensminger and Company, 57 Wood Street |
| WILLIAMSPORT | Servall Machinery & Supply, 140 E. 3rd Street |
| WILLOW STREET | Cope & Weaver Farm Equipment Co. |
| WOMELSDORF | H. W. Shepler & Sons |
| WYSOX | Robert Kneller |
| YORK | Burgard Bros., West and Philadelphia Street |
| | * McCune & Company, 3721 Mahoning Avenue Youngstown, Ohio |

## RHODE ISLAND

| | |
|---|---|
| EAST PROVIDENCE | J. J. Gregory & Sons, 54 Water Street |
| | * Diesel Engine Sales & Engineering Corp. Fish Pier Road Boston 10, Massachusetts |

## SOUTH CAROLINA

| | |
|---|---|
| AIKEN | Aiken Tractor & Implement |
| ALLENDALE | Allendale Produce Company |
| ANDERSON | Foundry & Steel Company |
| BISHOPVILLE | Austin Bros. |
| BOWMAN | Weathers Trading Center |
| BURTON | Terhune Sales & Service |
| CHARLESTON | Craven Auto Electric Co. |
| CHERAW | Purser & Rogers Implement Co. |
| COLUMBIA | * Columbia Supply Company, 823 Gervais Street |
| CONWAY | Eastern Sales Company |
| FLORENCE | Turner Implement Co., Inc |
| GEORGETOWN | Svedberg Chain Saw & Engine Service |
| GREENVILLE | Greenville Implement Company |
| GREENWOOD | Bourne Auto Parts Company |
| INMAN | Prince Growers Supply |
| KINGSTREE | Bunch Auto Parts Company |
| MARION | Atkinson Pontiac & Implement Co. |
| MULLINS | Mullins Farm Equipment Co. |
| NEWBERRY | Ralph P. Shealy |
| ROCK HILL | Farmers Tractor & Implement Co. |
| ST. GEORGE | Utsey Tractor & Implement Co. |
| SPARTANBURG | Spartan Automotive, Inc., 300 West Main Street |
| SUMTER | McLean Farm Equipment Company |
| TATUM | C. M. Steward |
| UNION | Jordan Farm Supply Company |
| WALTERBORO | Breeland Chevrolet Company |

## SOUTH DAKOTA

| | |
|---|---|
| ABERDEEN | Aberdeen Implement Company |
| ARLINGTON | Kneip Implement Company |
| ARTESIAN | Asper Implement Company |
| AVON | Hento Brothers |
| BELLE FOURCHE | Northern Hills Implement |
| BRISTOL | Biersbach Implement |
| BRITTON | Thorpe Auto Company |
| BROOKINGS | Harry Kellogg & Son |
| CHAMBERLAIN | Chamberlain Motor |
| CLARK | T. Thompson & Son |
| CORSICA | Bordewyk Implement |
| DELL RAPIDS | T. A. Ginsbach |
| DRAPER | Sanborn Standard Service |
| ELKTON | Roy Kramer |
| FAULKTON | Bauhs Implement Company |
| FLANDREAU | Harlan Motor Company |
| FT. PIERRE | Bob Clair Motor |
| FREEMAN | Eldon's Implement Co. |
| GETTYSBURG | Gettysburg Motor Company |
| GREGORY | John O'Neill & Sons |
| HIGHMORE | Hyde County Implement |
| HECLA | Hecla Implement |
| HOWARD | Frank J. Dold |
| HUDSON | Rau Hardware |
| HURON | Ross Babcock Implement |
| ISABEL | Isabel Trading Post |
| LEMMON | Hersrud Implement Co. |
| MADISON | Rhoden Implement Company |
| McLAUGHLIN | Rau's Sales & Service |
| MENNO | Hellwig Implement Co. |
| MILBANK | J. H. Drewlow, Inc |
| MITCHELL | Mitchell Implement |
| MOBRIDGE | Leo E. Schirber, Inc. |
| MURDO | Boe Auto Electric |
| NEWELL | Newell Implement Company |
| ONIDA | J. M. Reedy Implement |
| PARKSTON | Schroeder Implement |
| PHILIP | Kennedy Implement Co. |
| PLATTE | Les Howard |
| PRESHO | Presho Implement Co. |
| RAPID CITY | Bradsky Implement |
| REDFIELD | Spink County Farm Implement |
| ROSHOLT | Werner Chevrolet & Implement |
| ST. LAWRENCE | Atlee Motor Sales |
| SALEM | Salem Farm Equipment Company |
| SCOTLAND | Clough Implement Co. |
| SELBY | Jake Rabenberg Implement |
| SIOUX FALLS | * The Dakota Iron Store |
| | Pfeifer Implement |
| STURGIS | Black Hills Implement Co. |
| VERMILLION | Wyman & Sorenson |
| WAGNER | Farmers Union Exchange |
| WALL | E & E Service |
| WATERTOWN | Hubbard Implement Co. |
| WEBSTER | Batie Implement |
| WESSINGTON SPRINGS | Ray Whitlock |
| WINNER | Farm Supply Co. |
| YANKTON | List Implement |

## TENNESSEE

| | |
|---|---|
| BRISTOL | LeRoy N. Hull |
| CHATTANOOGA | * Nixon Machinery & Supply Co., Inc., 300 Carter Street |
| | Osborne Equipment Company |
| CLARKSVILLE | Black Patch Implement Company |
| | Cloud Bros. |
| CLEVELAND | Fred Robinson Implement Company |
| COLUMBIA | Mountcastle Implement Company |
| COOKEVILLE | Dunn's Auto Parts Company |
| COVINGTON | Noel Implement Company |
| DYERSBURG | Tri-County Equipment Company |
| FAYETTEVILLE | Yearwood Motor Company |
| FRANKLIN | Warren Farm Service |
| GALLATIN | Johnson Implement Company |
| GREENVILLE | Jaynes-Carter Implement Co. |
| JACKSON | Wilson Outdoor Equipment Co. |
| JOHNSON CITY | Young Supply Company |
| KINGSPORT | Mills Motor Company |
| KNOXVILLE | * Nixon Machinery & Supply Co., Inc. 3042 N. Central Avenue |
| | Osbourne Equipment Company |
| | Wilson, Weesner & Wilkinson, 202 W. Morelia Avenue |
| LAWRENCEBURG | Farmer's Supply Company |
| LEBANON | Vantrease Motor Company |

| | |
|---|---|
| McMINNVILLE | Slatton Implement Company |
| MEMPHIS | * Lewis-Diesel Engine Company, 92 West Carolina Avenu |
| | Bauers Auto Parts, 674 Walnut Street |
| | Choctaw, Inc., 1184 Tupelo |
| | Clarkkey Company, 1095 Union Street |
| | Hawkins Equipment Company, 1475 Thomas Street |
| | Master Mower Sales, 2518 Lamar Avenue |
| | Standard Parts, 170-198 S. Dudley |
| | Tri-State Equipment Company, 520 South Mulberry |
| | Wagner Sales & Service, 2913 Summer Avenue |
| | Weakley Equipment Company, 639 Monroe Avenue |
| MORRISTOWN | Morristown Equipment Company |
| MURFREESBORO | McFarland's Farm Implement Company |
| | Wilson Implement Company |
| NASHVILLE | * Nixon Machinery & Supply Co., Inc. 1211 Demon-Breun Street |
| | Wilson-Weesner-Wilkinson Company |
| PARIS | Chenoweth Implement Company |
| PULASKI | Abernathy Equipment Company |
| RIPLEY | Ripley Implement & Seed Company |
| SELMER | Selmer Implement Company |
| SHELBYVILLE | Burton Implement Company |
| SO. FULTON | Duke's Auto Parts Company |
| SPRINGFIELD | Long & Lucas Implement Company |
| SWEETWATER | Guthrie Bradley & Jones |
| TIPTONVILLE | Lake County Implement Company |
| UNION CITY | Farmers Implement Company |
| WINCHESTER | Rieben Electric & Machinery Company |

## TEXAS

| | |
|---|---|
| ABILENE | Carter Engine Works, 2316 Pine Street |
| ALICE | Lynn Bros. |
| AMARILLO | Overton Machinery Company, 713 East 10th Street |
| AUSTIN | Austin Machine & Grinding Company 219 East 5th Street |
| BEAUMONT | Teel's Maintenance Service, 1110 So. 4th Street |
| BONHAM | Brown Tractor Company |
| BRADY | A. H. Broad Company |
| BRENHAM | Brentex Truck & Tractor |
| BROWNSVILLE | Burton Auto Supply, 14th & Adams |
| | Delta Machine Company, 7th & Harrison |
| BROWNWOOD | Carlson's, Clark & Anderson Streets |
| CISCO | The Walton Electric Company, 511 Avenue 'D' |
| CLEBURNE | Zimmerman Sons & Company |
| CORPUS CHRISTI | C. E. Russell, Jr., 110 No. Chaparral Street |
| CORSICANA | Stroube Implement Company, Ltd., Highway 75 South |
| DALLAS | Conley-Lott-Nichols Machinery Company 1311 S. Ervay Street |
| | P. A. Ross Machinery Company, 3120 Grand Avenue |
| DEL RIO | Tim B. Cobb, 621 South Main |
| EL CAMPO | Allen's Diesel Service |
| EL PASO | Burdick & Burdick, 1701 Myrtle Avenue |
| | Tri-State Equipment Company, 1401 East Paisano Drive |
| | Francis Wagner Company, 1225 Texas Street |
| ENNIS | Ennis Tractor Company, 300 West Brown |
| FABENS | S & W Implement Company |
| FORT WORTH 4 | Better Welding Company, 440 So. Main Street |
| FREDERICKSBURG | Fredericksburg Machine Shop, 105 East San Antonio St. |
| GAINESVILLE | Beck's Auto Supply, 206 West Broadway |
| | Gainesville Auto Parts, 208 North Dixon |
| GALVESTON | A. A. Brunner, 4222 Broadway |
| GLADEWATER | S & W Repair Shop |
| HOUSTON | * Harley Sales Company, 3420 McKinney Avenue |
| KILGORE | Magneto Sales & Service Co., 621 South Commerce |
| | Sabine Machine & Supply Company |
| LaGRANGE | Janssen Bros. |
| LAREDO | Laredo Motor Mart, 1202 Houston Street |
| LONGVIEW | Industrial Power & Supply Co., 1220 Gladewater Road |
| LUBBOCK | Fred Berryhill Equipment Co., Plainview Cut-off Road |
| MARSHALL | Power Supply Company, 305 E. Austin |
| McALLEN | Cameron Auto Electric Service, 917 Austin Street |
| McCAMEY | Thompson Specialty Company |
| McKINNEY | City Auto Parts Company, So. Chestnut at Davis |
| MISSION | Mission Auto Electric |
| NOME | Nome Welding & Supply |
| ODESSA | Davenport Engine & Equipment Co., 701 County Rd. Wes |
| OLNEY | Ellis Machine & Electric Shop, 212 North Avenue 'C' |
| ORANGE | Mott Auto & Electric Co., 704 Front Street |
| PAMPA | Radcliff Bros. Electric Company, Box 151 |
| PARIS | John Scarborough Tractor Company, 333 Bonham Street |
| PLAINVIEW | W. O. Speck Machinery Company, 1007-9 Broadway |
| PORT ARTHUR | Port Arthur Motor Works, 1147 Savannah Avenue |
| RAYMONDVILLE | Burton Auto Supply, North 7th & Hiway |
| SAN ANGELO | Angelo Supply Company, 408 S. Oakes Street |
| SAN ANTONIO | Gibtrac, Inc., Route 7, Box 211-A |
| SHERMAN | Shipp Motor Company |
| STONEWALL | Simon J. Burg Sprayer Company |
| SWEETWATER | Sweetwater Electric Company, 108 Elm Street |
| TEMPLE | Farm Equipment Service, 2306 So. First St. |
| TEXARKANA | Action Supply Company, 1709 Texas Avenue |
| TYLER | Hobbs Equipment Company, 2021 W. Erwin Street |
| VICTORIA | Victoria Machine Works |
| WACO | The Motor Shop, 420 South 5th Street |
| | Richards Equipment Co., 910 Franklin |
| WAXAHACHIE | C. R. Feaster & Company |
| WESLACO | Burton Auto Supply, 3rd & Kansas |
| WICHITA FALLS | Mike Carter Engine Works, 219 Indiana Avenue |

## UTAH

| | |
|---|---|
| BRIGHAM CITY | Brigham Truck & Implement Company |
| CEDAR CITY | General Service Company |
| DELTA | Vodak Tractor Company |
| FILLMORE | Peterson Machinery Company |
| HEBER CITY | M & L Shop |
| LOGAN | Bullen Farm Equip. Company |
| MOUNT PLEASANT | Central Utah Implement & Hardware Co |
| OGDEN | Rasmussen-Thompson Company |
| ST. GEORGE | Bob's Garage |
| SALINA | Salina Feed & Supply |
| SALT LAKE CITY | * Arnold Machinery Company, Inc 433 West Second South Street |
| SPANISH FORK | Stevens Tractor Service |
| TOOELE | Garrard Garage & Implement Company |
| TREMONTON | Markham's |
| VERNAL | Murdock Machinery Company |

## VERMONT

| | |
|---|---|
| BARRE | Marsh-Allen Company |
| WHITE RIVER JUNCTION | Noble-Belisle Machinery, Inc |

* Diesel Engine Sales & Engineering Corp
Fish Pier Road
Boston 10, Massachusetts

## VIRGINIA

| | |
|---|---|
| ARLINGTON | * Phillips Machinery & Tractor Co 2910 Jefferson Davis Hwy |
| CHARLOTTESVILLE | Piedmont Tractor Co., Inc., P.O. Box 389 |
| CULPEPER | J. A. Swan, Jr. & Co |
| DANTE | Phillips Auto Supply Co |
| DANVILLE | Crowell-Long Motor Company, Inc. |
| HARRISONBURG | Whitesel Brothers |
| LYNCHBURG | Myers & Rhodes Equip. Co., 1612 Main Street |
| NEWPORT NEWS | W. L. Gleason Co., 3511 Jefferson Avenue |
| NORFOLK | G. & S. Equipment Co., 1840 N. Park Ave. |
| | Industrial Service Co., 1532 E. Princess Anne Road |
| | Land & Coates, Inc., 3301 Virginia Beach Blvd |
| NORTON | Norton Motor Inn |
| ORANGE | Waugh-Young Equipment Company |
| PETERSBURG | Ritchie Hardware & Impl. Co., 212 Grove Avenue |
| PURCELLEVILLE | Whitmore and Arnold |

| | |
|---|---|
| RICHMOND | * Phillips Machinery Company, 929 Meyers Street |
| | Buhrman & Sons, Inc., 1438 E. Franklin Street |
| | Producers Co-Operative Exchange, Inc 1436 E. Main Street |
| | Redmon Implement Co., Inc., 1910 E. Franklin Street |
| ROANOKE | Baker Brothers, Inc., 1402 Williamson Road |
| | McIlhany Equipment Co., Inc., P. O. Box 121 |
| STANLEY | Louderback's Implement Co., Rt. 1 |
| STAUNTON | S. Chester Slade, 223 N. Central Avenue |
| TAPPAHANNOCK | Sutton Farm Supply |
| TAZEWELL | Tazewell Equipment & Motor Corp. |
| WINCHESTER | Shade Equipment Company |
| WYTHEVILLE | R. P. Johnson Sons |

## WASHINGTON

| | |
|---|---|
| ABERDEEN | Grays Harbor Equipment Company |
| BELLINGHAM | Apex Engine Service, 2100 James Street |
| | Automotive Parts Service, 1322 State Street |
| BREMERTON | Williamson's Machine Shop, 2612 Burwell |
| CENTRALIA | Pacific Equipment Co., 820 North Tower |
| CHEHALIS | Graham Implement Company |
| EPHRATA | Ephrata Truck & Implement |
| EVERETT | Sound Farm Supply, 2401 Hewitt Avenue |
| EVERSON | Everson Implement Company |
| FERNDALE | Fassett & Barr |
| FORKS | Ulin Maintenance & Supply |
| LYNDEN | Richardson Tractor & Implement |
| MONTESANO | Whitney's Farm Store |
| MOSES LAKE | Odessa Trading Co. |
| MT. VERNON | Bert Robinson Implement, 315 Main Street |
| MOXEE CITY | Moxee City Warehouse |
| OKANOGAN | Graves Machine Shop |
| OLYMPIA | Andrews Auto Parts, 409 Chestnut |
| PASCO | Guenther Tractor |
| PORT ANGELES | Ulin Maintenance & Supply |
| PROSSER | Valley Hay & Implement |
| PULLMAN | Pullman Tractor Company |
| PUYALLUP | Ray Bock Equipment Company 11th N. W. at River Road |
| QUINCY | Patton & Son |
| SEATTLE | * Star Machinery Company, 241 Lander Street |
| | A. H. Cox & Company, 1757 First South |
| | Northern Commercial, 419 Colman Bldg |
| | Universal Equipment Co., 1549 Eastlake |
| | Yukon Equipment Company, 327 Colman Bldg |
| SPOKANE | * Star Machinery Company, East 415 Sprague Avenue |
| | Andrews Equipment Service |
| | Brende Machinery Company |
| SUNNYSIDE | Valley Hay & Implement Company |
| TACOMA | Motor Parts & Equipment Co., 1745 Jefferson |
| WALLA WALLA | Job & Wallace |
| | Melcher-Ray Machinery Company, 202 E. Alder |
| WENATCHEE | Mid-State Equipment Co., 313 North Mission |
| | Wells & Wade |
| WHIDBEY ISLAND | Whidbey Marina |
| YAKIMA | Rankin Equipment, 1010 So. First |

* Andersen Machinery
401 N. W. Fourth Avenue
Portland 9, Oregon

## WEST VIRGINIA

| | |
|---|---|
| CAMERON | Cameron Tool & Supply Company |
| CHARLESTON | * Engine Sales & Service Co., Inc. 919 Virginia Street, East |
| HUNTINGTON | Contractors Equip. & Supply Co., 2867 Third Avenue |

* Contractors Equipment Service Company
1415 Brighton Road, N. S.
Pittsburgh, Pennsylvania

## WISCONSIN

| | |
|---|---|
| ALMA CENTER | Adam Statz Impl. Co. |
| ANTIGO | Gresch Implement Company |
| APPLETON | Art F. Fuerst Implement Company |
| | Schmits Service |
| BARABOO | Kinnamon Saw & Magneto Service |
| BELOIT | Henry Hermann & Son |
| BONDUEL | Earl Stutzman Machine Shop |
| BURLINGTON | W. H. Bush & Sons |
| CLINTONVILLE | Farm Equipment Sales |
| DARIEN | Wilke-Darien Garage |
| DARLINGTON | Reichling Brothers |
| DeFOREST | DeForest Implement Company |
| EAU CLAIRE | Johnson Motor & Supply Co. |
| ELKHORN | Waite Implement Company |
| ELLSWORTH | Haarstad Sales & Service |
| FOND du LAC | Wisconsin Tractor & Equipment Co. |
| FOOTVILLE | Footville Implement Company |
| FOREST JUNCTION | Keller Implement Company |
| FRANKSVILLE | Rasmussen & Hansen |
| GREEN BAY | Brebner Machinery Company |
| HIGHLAND | George J. Fillbach |
| HUSTISFORD | Hi-Way Chevrolet Sales |
| INGRAM | Kaiser Implement Company |
| JUDA | Carter & Gruenwald Implement Company |
| KENOSHA | Highway Service Garage |
| LAKE BEULAH | Ells Bros. Farm Implement Company |
| LANCASTER | Gurkow Produce |
| LONDON | Carpenter's Garage |
| MADISON | Collins Equipment & Supply |
| | Thomas C. Olson Company |
| MANITOWOC | Seibold Implement Company |
| MILWAUKEE | Motor Grinding & Parts Company 817 W. National Avenue |
| | 2529 W. North Avenue |
| | Prime-Best, Inc., 3820 W. Villard Avenue |
| MERRILL | Knispel & Krueger |
| MINERAL POINT | Lancaster & Tooy |
| MONROE | Studer Super Service |
| MUKWONAGO | Hilltop Garage |
| NEW GLARUS | Disch Hardware |
| NEW RICHMOND | Polfus Implement Company |
| OCONOMOWOC | * Engine Power, Inc |
| OOSTBURG | Bruggink Bros., Inc. |
| OREGON | Lappley Fuel & Implement Company |
| OSHKOSH | The Lakeview Shop |
| OWEN | Gummerson Impl. Co. |
| PALMYRA | Palmyra Machine Works |
| PEEBLES | The Frank Nett Company |
| PLOVER | Laszewski Brothers |
| PLYMOUTH | Amos Miller & Son |
| PORTAGE | Portage Magneto & Electric Service |
| POTOSI | Andrew Bode Company |
| PRAIRIE du SAC | Wintermantel & Sprecher |
| RHINELANDER | Modern Farm Supply |
| RICHLAND CENTER | Moore Electric Service |
| SHAWANO | Equity Oil Cooperative |
| STURGEON BAY | Husby & Laubenstein |
| SUN PRAIRIE | Hanley Implement Company |
| TOMAH | George Von Haden Implement |
| UNION GROVE | M & B Farm Equipment Co. |
| VIROQUA | Iverson Impl. Co. |
| WAUSAU | Buch Farm Equipment |
| WEST BEND | Deyplex, Inc |

## WYOMING

| | |
|---|---|
| BASIN | Spratt & Bayne Implement Company |
| BUFFALO | Johnson County Implement Company |
| CASPER | Studer Tractor & Equipment Company |
| CHEYENNE | Wortham Machinery Company |
| POWELL | Reed Sales & Service |

| | |
|---|---|
| RIVERTON | Valley Implement Company |
| SHERIDAN | Valley Motor & Implement Company |
| SUNDANCE | Tracy Motor Company |
| TORRINGTON | Acker Auto Electric |
| | Torrington Implement Company |
| WORLAND | Fausset Implement Company |

* Arnold Machinery Company, Inc
433 West Second South Street
Salt Lake City, Utah

* Central Equipment Co
1435 Market Street
Denver, Colorado

* Midland Implement Company, Inc
Billings, Montana

## FOREIGN

### AFRICA

| | |
|---|---|
| ALGERIA | * Ets. Henry Hamelle<br>27, Boulevard Carnot, Alger |
| | * Ets. Henry Hamelle<br>4, Rue de l'Artillerie, Oran |
| BELGIAN CONGO | * Bureau Technique Bia<br>Boite Postale 1874, Elisabethville |
| | * Bureau Technique Bia<br>26 Avenue Paul Hauzeur<br>(B. P. 301) Leopoldville |
| EGYPT | * Mr. Artine Spendjian<br>P. O. Box 1505, Alexandria |
| | * Mr. Artine Spendjian<br>15, Rue Emad el Dine, Cairo |
| FR. CAMEROUN | * Ets. Henry Hamelle<br>B. P. 538, Douala |
| FR. EQUATORIAL AFRICA | * Ets. Henry Hamelle<br>B.P. 107, Brazzaville |
| FRENCH MOROCCO | Mr. Fauvergue<br>B. P. 44, Agadir |
| | * Ets. Henry Hamelle<br>35, Avenue Poeymirau, Casablanca |
| | * Ets. Henry Hamelle<br>42 rue Cuny, Fes |
| | * Ets. Henry Hamelle<br>Ksiri |
| | Mr. Brunel<br>B. P. 191, Marrakech-Gueliz |
| | * Ets. Henry Hamelle<br>Place Henry's, Meknes |
| | Mr. Alexandre<br>54 rue Victor Hugo, Mogador |
| | * Ets. Henry Hamelle<br>Angle Bd. de la Marne et Rue Caille, Oujda |
| | * Ets. Henry Hamelle<br>Avenue Lyautey, Petitjean |
| | * Ets. Henry Hamelle<br>Av. Clemenceau, Port Lyautey |
| | * Ets. Henry Hamelle<br>73 Rue Capitaine Petitjean, Rabat |
| FR. WEST AFRICA | Ets. de Tessieres<br>Abidjan (Ivory Coast) |
| | * Ets. Henry Hamelle<br>B. P. 10, Conakry |
| | * Ets. Henry Hamelle<br>B. P. 162, Dakar |
| MOZAMBIQUE | * Johnson & Fletcher, Ltd<br>P. O. Box 196, Beira |
| NORTHERN RHODESIA | * Johnson & Fletcher, Ltd<br>P. O. Box 443, Ndola |
| SOUTHERN RHODESIA | * Johnson & Fletcher, Ltd<br>P. O. Box 224, Bulawayo |
| | * Johnson & Fletcher, Ltd<br>P. O. Box 118, Gatooma |
| | * Johnson & Fletcher, Ltd<br>P. O. Box 588, Salisbury |
| | * Johnson & Fletcher, Ltd<br>P. O. Box 186, Umtali |
| SOUTH AFRICA | * Barlow's (O.F.S.) Ltd.<br>Nuffield Street, P.O. Box 1088<br>Hamilton, Bloemfontein |
| | * Barlow's (Cape) Ltd<br>P. O. Box 84<br>Voortrekker Road, Maitland, Cape |
| | * Thos. Barlow & Sons (Natal) Ltd<br>P. O. Box 1011, 365 Smith Street, Durban |
| | * Thos. Barlow & Sons (Natal) Ltd.<br>791 Main Street<br>Kokstad, East Griqualand |
| | * Thos. Barlow & Sons (S.A.) Ltd<br>7, Simmonds Street, P. O. Box 6901<br>Johannesburg |
| | * Thos. Barlow & Sons (Natal) Ltd.<br>P. O. Box 147<br>Pietermaritzburg, Natal |
| | * Barlow's (Eastern Province) Ltd<br>111, Grahamstown Road, Port Elizabeth |
| | * Thos. Barlow & Sons (Natal) Ltd.<br>P. O. Box 76<br>Empangeni, Zululand |
| International Zone of TANGIERS | Agence Generale Albert Tarpin<br>B. P. 287, Tangiers |
| TUNISIA | * Ets. Henry Hamelle<br>58, Avenue de Carthage, Tunis |
| | Mr. Canaud, Beja |
| | Messieurs Sacchetti Freres, Le Kef |

### ALASKA

| | |
|---|---|
| ANCHORAGE | Northern Commercial Company |
| | Yukon Equipment, Inc |
| FAIRBANKS | Northern Commercial Company |
| | Yukon Equipment, Inc |
| JUNEAU | Northern Commercial Company |
| | Chas. G. Warner Company |
| KETCHIKAN | Northern Commercial |
| | Tongass Trading Company |
| PETERSBURG | Fryer Machine Works |
| WHITEHORSE YUKON TERRITORY | Northern Commercial |

* Star Machinery Company
241 Lander Street
Seattle, Washington – U.S.A.

### ARGENTINA

BUENOS AIRES * Storer & Cia. Soc. Resp. Ltda
Chacabuco 443

### AUSTRALIA

RYDALMERE, N.S.W. * Tutt Bryant Ltd

### BELGIUM

BRUSSELS * Materiels & Materiaux de Construction en Belgique S.A., Rue de la Science 5

### BERMUDA

HAMILTON * Masters Ltd

## BOLIVIA

| | |
|---|---|
| LA PAZ | * Industrial Agencies (Bolivia) Ltda<br>P. O. Box 718 |
| ORURO | * Industrial Agencies (Bolivia) Ltda<br>P. O. Box 430 |

## BRAZIL

| | |
|---|---|
| ACRE | |
| Cruzeiro Do Sul | M. S. Pedreira & Cia |
| Xapuri | Abib Kalume & Cia |
| AMAZONAS | |
| Manaos | Moto Importadora Ltda |
| | J. G. Araujo & Cia. Ltda |
| BAIA | |
| Salvador | P. Labayle-Couhat |
| CEARA | |
| Fortaleza | A. Fiuza Filho & Cia |
| DISTRITO FEDERAL | |
| Rio de Janeiro | * Luiz F. Braga, Comercio E Industria S.A.<br>Avenida N. S. de Fatima, 22-3 |
| RIO de JANEIRO (State of) | |
| | Radio Luz Importadora, Campos |
| | Brayle & Cia., Rezende |
| | Oficina Rex Ltda., Rio Bonito |
| | Irmaos Tardelli, Terezopolis |
| ESPIRITO SANTO | |
| Vitoria | Importadora Capichaba |
| MARANHAO | |
| Sao Luiz | Guimaraes & Souza & Cia |
| MATO GROSSO | |
| Poxoreu | Genesio Martins |
| MINAS GERAIS | |
| Belo Horizonte | E. Marinho S/A |
| Carangola | Chevrand & Milton |
| Juiz de Fora | Maquinas Junqueira Ltda |
| Lavras | Industrias Libeck & Cia Ltda |
| Manhumirim | Tostes & Cia |
| Muriae | Renato Rabelo |
| Patos de Minas | Oscar Pacheco |
| Ponte Nova | Oficina Mecanica Garavini |
| | A. Fonseca |
| Theophilo Otoni | Henrique Arruda & Filho |
| Santos Dumont | Abreu & Martins Ltda |
| PARA | |
| Belem | Soc. Geral de Export. Ltda |
| PARANA | |
| Curitiba | Lima & Valente Ltda |
| Londrina | Lima & Valente Ltda |
| PERNAMBUCO | |
| Recife | Jose Lobo Comercio S.A. |
| PIAUI | |
| Parnaiba | Pontion Rodrigues & Cia. Ltda |
| RIO GRANDE DO SUL | |
| Porto Alegre | Cocito Irmaos Tecn. e Com. S/A |
| Caxias do Sul | Evaristo de Antoni & Cia. Ltda |
| Cruz Alta | Arno L. Pereira |
| Erechim | Irmaos Valentini & Cia. Ltda |
| Horizontina | Schneider, [illegible] & Cia. Ltda |
| Pelotas | Soc. Com. e Import. de Materiais<br>Agro-Pecuarios Ltda |
| Passo Fundo | Menegaz, Tagliari & Cia |
| Santa Maria | Sul Brasileira de Com., Import. e<br>Representacoes (CIPRA) Ltda |
| Santa Rosa | Irmaos Mayer Ltda |
| SAO PAULO | |
| Sao Paulo | Cocito Irmaos Tecn. e Com. S/A |

## BRITISH HONDURAS

| | |
|---|---|
| BELIZE | * The Belize Supply Co., Ltd, P. O. Box 272 |

## BRITISH WEST INDIES

| | |
|---|---|
| JAMAICA | * Masterton, Limited<br>23-25 Hanover Street, P. O. Box 73<br>Kingston |
| TRINIDAD | * Industrial Agencies Limited, 14 High Street<br>San Fernando |

## CANADA

| | |
|---|---|
| **ALBERTA** | |
| CALGARY | * Mumford, Medland, Limited<br>330 - 10th Street North West |
| | Bruce Robinson Electric Ltd.<br>9th Avenue & 4th Street, West |
| EDMONTON | McLeod's Limited |
| | The Bruce Robinson Electric, Ltd<br>10123, 102nd Street |
| LETHBRIDGE | McLeod's Limited |
| | Bruce Robinson Electric Ltd. |
| **BRITISH COLUMBIA** | |
| CHILLIWACK | C. R. Fortin & Son<br>125 Trans-Canada Highway West |
| KAMLOOPS | Stan Steele Limited<br>142 – 2nd Avenue |
| PENTICTON | Farm & City Service Co. Limited<br>133 Westminster Avenue |
| PRINCE GEORGE | Northern Magneto and Electric<br>975 Second Avenue at Queen Street |
| VANCOUVER | * Pacific Engines & Equipment, Ltd<br>52 E. Cordova Street |
| | McBain Air-Cooled Engine Co.<br>1968 West Georgia Street |
| VERNON | Jack Fuhr Limited, 3312 Barnard Avenue |
| VICTORIA | Angus Marine Sales & Service, 564 Yates Street |
| **MANITOBA** | |
| BRANDON | Frank Lawson & Sons Ltd., 601 – 9th Street |
| DAUPHIN | J. Buckwold & Son |
| FLIN FLON | Midwest Diamond Drilling |
| NEEPAWA | William Whitmore |
| PORTAGE la PRAIRIE | B. Christianson & Sons, 1st Street, N. W. |
| RUSSELL | Robertson Brothers |
| SWAN RIVER | J. G. Rourke |
| WINNIPEG | * Mumford-Medland, Ltd., 576 Wall Street |
| | J. H. Ashdown Hardware Ltd. |
| | Marshall Wells Co., Ltd. |
| | McLeod's Limited |
| **NEW BRUNSWICK** | |
| FREDERICTON | * J. Clark & Son Limited, 123 York Street |
| **NEWFOUNDLAND** | |
| CORNER BROOK | Newfoundland Tractor & Equipment Co., Ltd<br>P. O. Box 683 |
| ST. JOHN'S | * Newfoundland Tractor & Equipment Co., Ltd |
| **NOVA SCOTIA** | |
| HALIFAX | * Construction Equipment Company, Ltd<br>P. O. Box 67, 135 Lower Water Street |
| LIVERPOOL | Construction Equip. Co. Ltd., 308 Main Street |
| NEW GLASGOW | Spencer Motors, Limited |
| SIDNEY | Industrial Div., Atlantic Spring & Machine Co., Ltd |
| **ONTARIO** | |
| ALDERSHOT | A. F. Tapsell |
| BARRIE | Torgis Automotive Limited, 39 High Street |
| BLENHEIM | H. L. Turner |
| BROCKVILLE | Nedow Auto Parts, R.R. 3 |
| | St. Lawrence Engines Ltd. |
| BRUNNER | Rudy Napziger |
| BURLINGTON | Niagara Brand Spray Co., Ltd. |
| BROCKVILLE | Hub Equipment Ltd., 21 Cowan Avenue |
| CLINTON | McAlpine & Daw |

| | |
|---|---|
| CORNWALL | Matheson's Service Station, R.R. 2 |
| | C. McDonell Motor Sales, 237 Water Street |
| DRESDEN | Donald C. Simpson |
| DRYDEN | Kraft Motors & Supply Ltd. |
| DUNNVILLE | Cowan & Lymburner Limited |
| ESSEX | Len Block |
| FINGAL | Mr. Max Emery |
| FORT WILLIAM | Twin City Industrial Equipment Ltd. |
| GALT | Rosebrugh & Hall |
| GANANOQUE | W. A. Moulton Sales & Service |
| GORE BAY | McQuarrie Agencies |
| GUELPH | Pioneer Equipment |
| HAMILTON | Contractors Machy. & Equipment Limited |
| | 194 Barton Street East |
| | Milgrom Electric Limited, 79 King Street West |
| | Guaranty Motors Co., Ltd., 58 Market Street |
| HAWKESBURY | H. A. H. Rutherford, R. R. No. 2 |
| HAWKESVILLE | Jacob S. Martin |
| KAPUSKASING | Brunelle Sales |
| KENORA | Dingwall Motors Ltd. |
| KINGSTON | Kingston Auto Motor Rebuilders |
| KIRKLAND LAKE | Northland Sales & Service, 95 Government Road |
| KITCHENER | Super Motor & Lighting |
| | Waterloo Country Supplies Co-Operative |
| | 60 Frederick Street |
| LEAMINGTON | J. J. Matheson |
| LONDON | E. P. Abey Limited, Wharncliffe Road, South |
| McGREGOR | D. Knapp |
| MILVERTON | Geo. S. Cowan |
| MITCHELL | Scott & Mansfield |
| MONKTON | Moses Bender |
| MORRISBURG | C. McDonell Motor Sales |
| NAPANEE | Napanee Machine & Welding Works |
| NEW LISKEARD | Bartlett's Auto Electric |
| NEW TORONTO | * Consolidated Engines & Machy. Company, Ltd |
| | 14th & Birmingham Streets |
| NEWTON | Nick Schmidt |
| NIAGARA FALLS | Crawford Motors & Marine Supplies |
| | Victoria & Bridge Sts. |
| NORTH BAY | Northland Equipment & Supply Company |
| | 342 Percy Street |
| OJIBWAY | Orlo Farnham |
| OTTAWA | Baker's Equipment & Supply, 253 Bank Street |
| PARKHILL | Mr. Sid Emery |
| PEMBROKE | R. Patterson & Sons Ltd. |
| PERTH | Bells Garage |
| PLANTAGENET | Bosse Bros. |
| PORT ARTHUR | Thornes–Sargent Ltd. |
| PORT STANLEY | Mr. Spears |
| PRESCOTT | Frank Perkins Co |
| RENFREW | Martin Equipment Co |
| ROCKLAND | Lescart Motor Sales |
| ST. CATHARINES | Mr. George Cary, R.R. 4 |
| | Don Dorsey |
| | Lloyd Dorsey |
| | Niagara Motive Supply |
| | Robert's Sales & Rental Service, 112 Hartzell Road |
| ST. JOACHIM | G. Decaire |
| SARNIA | Neville Automotive |
| SAULT STE MARIE | Soo Equipment Limited, 114 Tancred Street |
| | L & S Machine |
| SHARBOT LAKE | Joe Vinkle Garage |
| SMITH FALLS | Clark & Lewis |
| STAMFORD CENTER | Niessen Farm & Garden Equip., 34 Portage Road |
| STONEY CREEK | Lee Equipment Co. |
| STRATFORD | Jas. L. Omand |
| STRATHROY | Mr. A. V. Wright |
| SUDBURY | Duncan Brothers Limited, 84–86 Cedar Street |
| TEMAGAMI | Jack Cowley's Garage |
| TILBURY | R. H. Moore |
| TIMMINS | Hamden & Newell Ltd., 70 Pine Street, S. |
| TRENTON | Quinte Machine & Repair Co., 23 Balsam Street |
| WALLACEBURG | A. C. Cameron Motor Sales |
| WELLAND | County Motors |
| WHEATLEY | B. A. Lynn |
| WINDSOR | C. H. Henze Company, Ltd., 620 Glengarry Avenue |
| | Noel Construction |
| | c/o C. H. Henze Co., Ltd., 620 Glengarry Avenue |
| | H. Vollans, Pitt Street |

**QUEBEC**

| | |
|---|---|
| AMQUI | Ferronnerie Generale |
| ANSE aux MECHINS | Andre Guimont |
| BIC | Gerard Cassisto, Gerant |
| | Societe Cooperative Agricole |
| CABANO | J. N. Gauvin |
| CAP CHAT EST | Robert Gagnon |
| CHAMBORD | J. C. A. Menard |
| CHANDLER | Paul Morin |
| CHICOUTIMI | Quebec Gas & Diesel Ltd. |
| | c/o Perron Equipment Limited, |
| | Blvd. St. Ignace |
| CLORIDORME | Yvon Huot |
| FARNHAM | Hector Delorme, 405 rue Principale |
| FORESTVILLE | Cleary & Poitras |
| GIRARDVILLE | Henri Pelchat |
| GRANDE BAIE | P. E. Lavoie |
| GRANDE VALLEE | J. Robert Lebreux & Cie. Enr. |
| GRANDES BERGERONNES | Laurent Brisson |
| | Lionel Lapointe |
| L'ABORD a PLOUFFE | Charron Clutch & Brake Rebuilders |
| MATANE | S. Coulombe |
| MONT-JOLI | J. X. Levesque |
| MONTREAL | Crankshaft Grinder Reg'd., 820 Notre Dame St. W. |
| | Hochelaga Auto Electric Ltd., 5700 Hochelaga St. |
| | LaLonde Electric, 4212 rue Iberville |
| | Mercier Motor Supply Ltd., 4607 St. Denis Street |
| | Simplex Piston Rings Ltd., 1596 Amherst Street |
| | Sylvestre Cycle & Sports Ltee, 4801 Papineau Street |
| Town of | * Consolidated Engines & Machy. Co. Ltd |
| MOUNT ROYAL | 5645 Pare Street |
| PLESSISVILLE | Farano, Limited |
| PONT ROUGE | Lucien Frenette |
| QUEBEC CITY | Rene Talbot Limited, 205 St. Paul Street |
| RIVIERE du LOUP | Clement Morin |
| ROUGEMONT | Garage Loiselle, 5th Ave. |
| ROUYN | Lariviere & Freres Ltee, 32 Rue Principale |
| ST. BASILE | Gedeon Delisle |
| ST. EPHREM | Jos. Cote Incorporee |
| ST. EUSEBE | David Rioux |
| STE. FELICITE | Chs-Eug. Boucher |
| ST. HYACINTHE | Maska Auto Electric Reg'd., 540 Vaudreuil Street |
| ST. JEAN de la LANDE | Andre Breton |
| ST. JOACHIM de TOURELLE | Philias Therrien |
| ST. LOUIS du HA! HA! | P. E. Berube |
| ST. LUDGER | Adelard Soucy Ltee |
| ST. YVON | J. E. Beaudoin |
| SHERBROOKE | La Societe Cooperative Agricole de Sherbrooke |
| | 43 Lansdowne Avenue |
| THREE RIVERS | Stanley Motors, 1167 St. Julie Street |
| VICTORIAVILLE | La Fonderie Universel Engr. |
| VILLE ST. MICHELE | Garage Delorme, 4100 Cote St. Michele |

**SASKATCHEWAN**

| | |
|---|---|
| ASSINIBOIA | Harvey's Hardware Ltd. |
| DAVIDSON | F. B. Gatzke |
| ESTON | Farmer's Supply Co. |
| GRAVELBOURG | Ernest Gauthier |
| GRENFELL | Grenfell Trading Co. |
| HUMBOLDT | Bowman Brothers Limited, Fifth Avenue |
| | McLeod's Limited |
| IMPERIAL | A. J. Hannah |
| KINDERSLEY | Halpenny Agencies |
| | McLeod's Limited |
| LEADER | Lawrence Nagel |

| | |
|---|---|
| LLOYDMINSTER | McLeod's Limited |
| MELVILLE | McLeod's Limited |
| | Melville Machinery Sales |
| MOOSE JAW | Bowman Brothers Limited, 121 High Street, West |
| | McKenzie Auto Equipment |
| | Moose Jaw Distributing Co., Ltd. |
| NIPAWIN | McLeod's Limited |
| | Springman Motors |
| No. BATTLEFORD | Bowman Brothers Limited, 1032 Main Street |
| | Gladwell Motors Limited |
| | Hornsby & Son |
| | McKenzie Auto Equipment Limited |
| | McLeod's Limited |
| PELLY | Campbell's Garage |
| PRINCE ALBERT | Bowman Brothers Limited, 20 – 12th Street, West |
| | Electric Shop Ltd. |
| | McLeod's Limited |
| RAYMORE | Paisley Service |
| REGINA | * Mumford, Medland, Limited, Albert St. & 5th Avenue |
| | J. H. Ashdown Hdwe. Co. Ltd, 7th Ave. and Smith St |
| | Bowman Bros. Ltd., Distribution Warehouse Scarth & Fifth |
| | Kern Farm Equipment Limited 6th Ave. and Hamilton Street |
| | McKenzie Auto Equipment Limited, 2035 Albert St |
| | McLeod's Limited |
| | Robinson Machinery Company, 2127 South Railway St |
| | The Saskatchewan Federated Co-Operatives, Ltd 1150 Rose Street |
| ROSETOWN | Bowman Brothers Limited |
| | C. E. Conlin |
| | McLeod's Limited |
| ROSE VALLEY | Rose Valley Electric |
| SASKATOON | * Mumford-Medland, Ltd., 130 Avenue A North |
| | Bowman Brothers Limited, 3rd Avenue & 24th St. |
| | Davies Electric Co. |
| | Kern Farm Equipment |
| | H. Lambert Electric Co. |
| | Mabee and Paulson |
| | McKenzie Auto Equipment Ltd |
| | McLeod's Limited |
| | The Saskatchewan Federated Co-Operatives, Ltd 12 – 23rd Street, East |
| SHACKLETON | J. H. Moffatt |
| STRASBOURG | E. E. Erickson |
| STRONGFIELD | W. A. Norrish |
| SWIFT CURRENT | Eagle Farm Equipment Limited |
| | Kern Farm Equipment Limited |
| | McLeod's Limited |
| | Shook's Farm Equipment, Ltd. |
| TISDALE | Bowman Brothers Limited, 100th Avenue |
| | McLeod's Limited |
| | E. R. Noe |
| UNITY | Kripps Brothers |
| WEYBURN | Bowman Brothers Limited, Railway Avenue |
| | Lorie's Electric Ltd. |
| | Thompson Motors |
| YORKTON | Bowman Brothers Limited |
| | Farm Equipment Service |
| | Kern Farm Equipment Limited |
| | Kozan Farm Equip. |
| | McKenzie Auto Equipment Limited |
| | McLeod's Limited |

**CHILE**

| | |
|---|---|
| CONCEPCION | Importadora Concepcion Ltda Lincoyan 684, |
| | Antonio Escobar Williams & Cia. Ltda. Lincoyan 684 |
| SANTIAGO | * Sociedad Importadora del Pacifico Ltda Alameda Bernardo O'Higgins 1166 Casilla 82-D |
| | Antonio Escobar Williams & Cia. Ltda. Alameda 1166 |
| VALPARAISO | Compania Comercial De Valparaiso, S.A. Cockrane 719 |

**COLOMBIA**

| | |
|---|---|
| BARRANQUILLA | * Representaciones Santa Maria Ltda Almacen Universal, Calle 37, No. 44-116 Apartado Aereo No. 854 |
| BOGOTA | * Ambrosi & Cia. Ltda. Calle 13 No. 12-22 |
| CALI | * Representaciones Santa Maria Ltda. Almacen Universal, Calle 25, No. 7-60 Apartado Aereo No. 1210 |
| MEDELLIN | * Representaciones Santa Maria Ltda. |

**COSTA RICA**

| | |
|---|---|
| SAN JOSE | * Costa Rica Machinery Company, Inc P. O. Box 1328 |

**CUBA**

| | |
|---|---|
| HAVANA | * Armando J. Valdes & Cia Ingenieros Importadores, S.A. Fabrica No. 13, P. O. Box 824 |

**DOMINICAN REPUBLIC**

| | |
|---|---|
| CIUDAD TRUJILLO | * General Sales Co. C. Por A. Apartado 746 |

**ECUADOR**

| | |
|---|---|
| GUAYAQUIL | * Luis Vallejo Araujo, P. O. Box 717 |
| QUITO | * Luis Vallejo Araujo, P. O. Box 245 |

**EL SALVADOR**

| | |
|---|---|
| SAN SALVADOR | * Salvador Machinery Company, P. O. Box 125 |

**ENGLAND**

| | |
|---|---|
| LONDON | * Power Units & Equipment Standbrook House 2/5 Old Bond Street |

**FRANCE**

| | |
|---|---|
| PARIS 17E | * Union Automobile Technique et Commerciale 24, Avenue de la Grande Armee |

**FINLAND**

| | |
|---|---|
| HELSINGFORS | * Oy Suomen Autoteollisuus AB Flemingsgatan 27 |

**GREECE**

| | |
|---|---|
| ATHENS | * Bio Industrial & Technical Company Constantinople Avenue No. 177 |

**GUATEMALA**

| | |
|---|---|
| GUATEMALA | * Equipos Mecanicos de Guatemala, S. A. Apartado Postal 472 |

**HAITI**

| | |
|---|---|
| PORT–au– PRINCE | * Charles Fequiere & Cie., P. O. Box 198 |

(Continued)

## HAWAII

HONOLULU, T. H. * Honolulu Iron Works Company
Nuuanu & Queen Sts., Box 3140

HILO * Hilo Iron Works

## HONDURAS

TEGUCIGALPA, D.C. * Casa Comercial Mathews, Inc
P. O. Box 29

## ICELAND

REYKJAVIK * Elding Trading Company

## INDIA

BOMBAY Atul Engineering Company
9 Union Bank Building
78 Apollo Street, Fort
Intercontinent (Travencore) Limited
Caltex House, 8 Ballard Road

CALCUTTA Indo-American Commerce Ltd.
Artistry House, 15 Park Street

NEW DELHI Escorts (Agriculture & Machines) Ltd
Pratap Building, Connaught Circus
* Graymor International, Inc
27-29 Pearl Street
New York 4, New York

## INDONESIA

BANDUNG * N. V. v/h Ruhaak & Company
Djl-Sultan Tirtojoso 9, Post Box 133

DJAKARTA * N. V. v/h Ruhaak & Company
Tanah Abank Barat 6

MEDAN * N. V. v/h Ruhaak & Company
Djalan Istana 15, Post Box 42

SOURABAYA * N. V. v/h Ruhaak & Company

## IRAN

TEHERAN * Mohammad Sadegh Mahshid
Saray Mohamadi

## ISRAEL

HAIFA * Palestine Engineering Stores
P. O. Box 52

JERUSALEM * Palestine Engineering Stores
P. O. Box 637

TEL-AVIV * Palestine Engineering Stores
P. O. Box 509

## LEBANON

BEIRUT * Richard A. Abdunnur, P. O. Box 1371

## MADAGASCAR

TANANARIVE * Henri Fraise Fils & Cie.

## MEXICO

AGUASCALIENTES J. Ramiro del Villar
Emiliano Zapata No. 29, Aguascalientes

BAJA CALIFORNIA Alfonso B. Canseco
Ezquerro 23, La Paz
Tubos y Equipos de California S.A.
Calle del Puerto No. 270, La Paz
Genero Gongora
Ave. Gastelum y 12, Ensenada

CAMPECHE Luis F. Romero Nicolau
Calle 10 No. 325, Campeche

CHIAPAS Amin Aramoni y Cia
La Pontiente 38 y 2a Ave. Sur, Tuxtla Gutierrez
Enrique Gutierrez
Edif. Verdun, Tapuchula
Maquinaria y Servicio
Central Norte No. 14, Tapachula
Vincente Yannini
Mazariegos Ote. No. 18, S. Cristobal las Casas

CHIHUAHUA G. Y. L. S. A.
Ave. 10 de Mayo 3603, Chihuahua
Super Motores, S. A.
Alvaro Obregon y Minerva, Nuevo Casas Grandes

COLIMA J. Jesus de la Torre
Hidalgo No. 93, Colima

DURANGO Mendivil Motors, S. A.
20 de Nov. y Fco. I. Madero, Durango

GUANAJUATO Rafael Angel Ocampo
Juarez 74-A, Celaya

GUERRERO Alejandro Sotelo
Ave. Cuauhtemoc 79, Acapulco

HIDALGO Central de Maquinaria, S. A.
Pachuca

JALISCO Maquinaria Del Pacifico, S. A.
Esq. Lopez Cotilla Y Maestranza
Guadalajara
Motores y Maquinaria, S. A.
Miguel Blanco 191, Guadalajara

MEXICO, D. F. * General Supply Company, Vallarta No. 1
Comercial de Maquinaria, S. A., Victoria No. 85
Ings. Acosta y Padilla, 20 de Noviembre No. 136

MICHOACAN Aurelio Campos, Reforma y Morelos,
Melchor Ocampo del Balsas
Equipos Agricolas e Industriales
Calle del Trabajo No. 18, Morelia
Luis Luna
Av. Hidalgo No. 39, Zamora

NUEVO LEON Sada Gomez
Padre Mier Ote 133, Monterrey

OAXACA Federico Zorrilla Baigts
Matamoros y Garcia Vigil, Oaxaca
Eleazar Lopez
Calle 2 de Abril No. 5, Miahuatlan

PUEBLA Accesorios y Suministros
Ave. 2 Poniente No. 704, Puebla
Serafin Balcazar
Constitucion No. 1, Huauchinango
Alfonso Cabrera
5 de Mayo No. 803-E, Puebla
Ingenieria y Equipos, S. A.
Av. Reforma 3104, Puebla

QUERETARO Central de Maquinaria, S. A.
de Juarez 50 Nte, Queretaro

SAN LUIS POTOSI Fundicion Pizzuto, S. A.
Av. Juarez No. 52, San Luis Potosi

SINALOA Cia. Comercial del Noroeste, S. A.
Angel Flores y Corona, Culiacan
Ernesto Coppel Marini
Aquiles Serdan No. 138 Ote, Mazatlan
Surtidora Agricola y Ganadera, S. A.
Ave. Madero y Zaragoza, Los Mochis

SONORA A. Fernandez y Cia.
Alvaro Obregon No. 94, Magdalena
Representaciones y Distribuciones,
Ave. Serdan No. 285, Guaymas

TABASCO Distribuidora Comercial Tabasqueno, S. de R.L.
Josa Ma. Pino Suarez No. 13, Villahermosa

TAMAULIPAS Luis Arce
Hidalgo y 10 Sur., Ciudad Victoria
Ferretera del Golfo
Ave. Ribera 412 Ote., Tampico

VERACRUZ Abastecedora Electrica de Cordoba
Ave. 3 y Calle 9, Cordoba

(Continued)

Maquinaria e Implementos, S. de R.L.
Av. 1 y Calle 5, Cordoba
Filiberto Barrera
Morelos 22, Coatepec
Refaccionaria Juarez
Corregidora No. 5, Coatzacoalcos
Comercial Navia S. A.
5 de Mayo No. 102, Veracruz
Serafin Garcia
5 de Mayo 103, Veracruz

YUCATAN — Cia Perforadora de Pozos de Agua
Calle 59 No. 521, Merida

ZACATECAS — Jesus de la Mora
Gonzalez Ortega 36, Zacatecas

### NETHERLANDS

ROTTERDAM — * R. S. Stokvis & Zonen

### NETHERLANDS ANTILLES

CURACAO — * Frederik Mercantile Company
Caracasbaaiweg No. 49

### NEW ZEALAND

WELLINGTON — * P. D. Trickett & Company, Ltd
182 Wakefield Street

### NICARAGUA

LEON — * Nicaragua Machinery Company
Sucursal de Leon

MANAGUA — * Nicaragua Machinery Company,
Apartado 469

### NORWAY

OSLO — * Maskin A/S K. Lund & Company
Revierstredet 3

### PAKISTAN

EAST PAKISTAN
RAMNA, DACCA — Tractors (Pakistan) Ltd.
Sulistan Cinema Bldg.

WEST PAKISTAN
KARACHI — Buckwell & Company, Ltd.
Spencers Building
McLeod Road
P.O. Box No. 437

LAHORE — Buckwell & Company, Ltd., 65, The Mall
MULTAN — Buckwell & Company, Ltd., Hasting Street
SUKKUR — Buckwell & Company, Ltd.
Khudadad Khan Building
Barrage Road

PESHAWAR — Buckwell & Company, Ltd.
c/o Dak Bungalow
Saddar Road

* Graymor International, Inc
27-29 Pearl Street
New York 4, New York

### PERU

LIMA — * Peruvian Trading Corp. Ltd., S. A.
Lampa 659, Casilla 1537

### PHILIPPINE ISLANDS

MANILA — * Earnshaws Docks & Honolulu Iron Works

### PORTUGAL

LISBON — * Joao Felix da Silva Capucho
121, Rua de Sao Paulo, 129

PORTO — Joao Felix da Silva Capucho
139 R. Mousinho da Silveira 143

### PUERTO RICO

SAN JUAN — * Ricardo Davila Sucesores
P. O. Box 3669

### REPUBLIC of PANAMA

PANAMA, R. P. — * Guardia & Cia, S. A.

### SAUDI ARABIA

JEDDAH — * Mohamed Ali Maghrabi

### SURINAM - NETHERLANDS GUIANA

PARAMARIBO — * C. Kersten & Company, N. V.
Steenbakkerijstraat 27
P. O. Box 216

### SWEDEN

STOCKHOLM — * Ingeniorsfirman T. Jutgard
Korsbarsvagen 6-10

### SWITZERLAND

ZURICH — * Baumaschinen A. G., Badenerstrasse 582

### SYRIA

DAMASCUS — * Richard A. Abdunnur, P. O. Box 553
LATTAKIA — Farid & Nabil Awad, P.O. Box 57

### TURKEY

ISTANBUL — * Niyazi Kiran
Abed Han 45, P. O. Box 1597, Galata

### URUGUAY

MONTEVIDEO — * Storer & Cia. S.A. Uruguaya
Mercedes 1312

### VENEZUELA

BARQUISIMETO — Intagro, C. A., Edif. La Palma, Calle 23
I. A. Senior & Hijo, Sucs., S. A.
Avenida 20 No. 26–47
Macamps, S.A., Avenida 20 No. 28 - 70

CARACAS — * Leopoldo Turco Rivas
Apartado Postal No. 1691
Lorenzo Bustillos M. & Cia Susc., C. A.
Apartado Postal No. 234
C. A. de Tractores y Maquinarias
Estatua Sucre a Parque Artigas
Maquinarias Mendoza, C. A.
Apartado Postal No. 2641
Montemayor & Cia., Suc., S. A.
Apartado Postal No. 164
C. A. Tecnomat, Apartado Postal No. 108

MARACAIBO — Oficina Tecnica Stubbins, C. A.
Apartado Postal No. 162
Rafael Molero G. & Cia., Almacen Multiple,
Calle 100 No. 9-70

MARACAY — Maquinarias Mendoza, C. A.
Avenida Bolivar No. 44 - 1 Este

PUERTO LA CRUZ — Oficina Tecnica Stubbins, C. A.
Apartado Postal No. 4072

# MARVEL-SCHEBLER CARBURETER

## FOR WISCONSIN MODELS VP4, VP4D and VG4D ENGINES

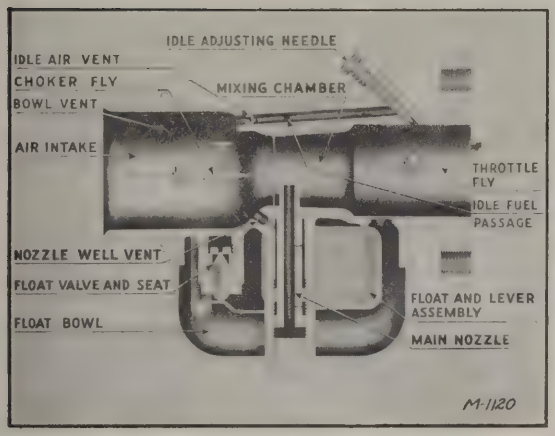


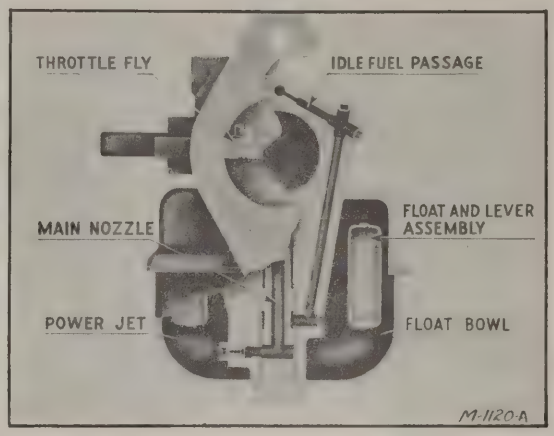


### DESCRIPTION

1. The Model VH-(Wis. No. L-54-Etc.) is a float type carburetor with idle fuel adjustment designed for use with the Models VP4, VP4D and VG4D Wisconsin Air Cooled gasoline engines, and is made up of two major units—a die cast aluminum throttle body and a stamped steel fuel bowl.
2. The model number is stamped on a square boss, provided for it on the body casting.

### OPERATION

With the throttle fly slightly open from the closed position to permit idling, the main fuel nozzle may be delivering little or no fuel, as only a very small quantity of air passes through the mixing chamber at this time. An idle passage is provided to carry sufficient air and fuel to the engine side of the throttle fly where the suction is high. This passage takes the air from the inlet side of the venturi to the intersection of the vertical idle fuel passage (which connects with the main nozzle assembly) and delivers the air-fuel mixture through an opening controlled by the idle adjusting needle to the throttle barrel just beyond or on the engine side of the throttle fly. The idle system is practically independent of the main nozzle system, and only controls the fuel metering at low engine speed. As air-flow increases with the opening of the throttle fly the main nozzle begins to deliver fuel, and the delivery from the idle system decreases until at full throttle, delivery is entirely from the main nozzle.

### ADJUSTING CARBURETOR

1. To start the engine, close the choker fly. When the engine starts, open choker to the proper warm-up position. After engine has warmed up, open choker fully.
2. Close the throttle and adjust the throttle stop screw to give the proper idle speed. The idle adjusting needle should be in proper adjustment at about ¾ to 1 turn open. Turn the idle adjusting needle open until engine rolls from "richness". Then turn the needle towards the seat until the engine runs irregularly from "leanness". From the "lean" setting, open the idle adjusting needle to the richest mixture that will not cause the engine to "roll" or run unevenly. This adjustment will, in most cases, give a slower idling speed than a slightly leaner adjustment with the same throttle stop screw setting, but will give the smoothest idle operation. After the idle adjusting needle setting has been made, it may be necessary to revise the throttle stop screw setting to give the proper idling speed.

### CAUTION:

Care should be taken not to damage the idle adjusting needle nor its seat by turning the idle adjusting needle too tightly against the seat, as damage to either of these parts will make a satisfactory idle adjustment very difficult.

MARVEL-SCHEBLER CARBURETOR DIVISION, BORG-WARNER CORPORATION

DECATUR, ILL., U. S. A.

Printed by
Wisconsin Motor Corp
In U.S.A.



ML-3-2
Repl. ML-3

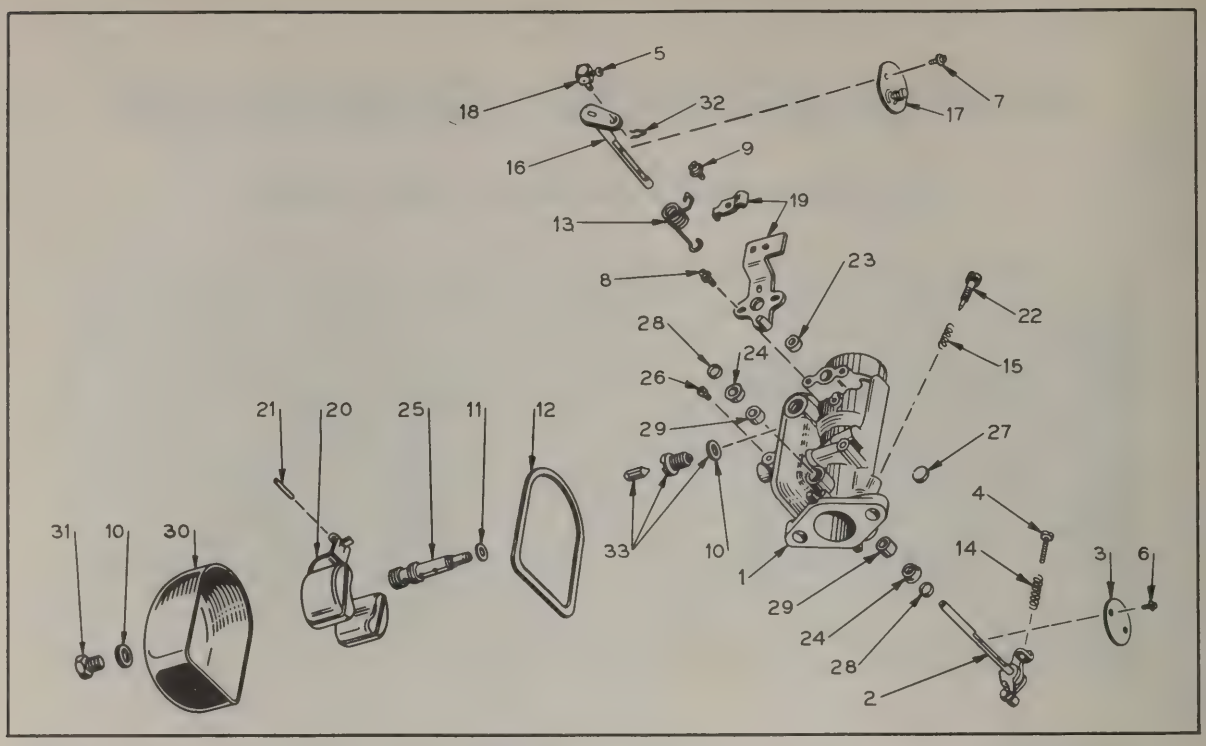


## SERVICE PARTS LIST

| Ref. No. | Part Name — Description | L-54 VH-16 | L-54-D VH-20 | L-54-B VH-22 | L-54-C VH-23 | L-54-F VH-30 | L-54-J VH-45 | L-54-J-1 VH-69 VH-69A | L-54-K VH-49 | L-54-N VH-71 |
|---|---|---|---|---|---|---|---|---|---|---|
| 1 | Carburetor Assembly — Complete | 10-2855 | 10-2950 | 10-2964 | 10-2980 | 10-3111 | 10-3396 | 10-3774 | 10-3398 | 10-3696 |
| 2 | Throttle Shaft Assembly | 13-919 | 13-956 | 13-948 | 13-919 | 13-980 | 13-956 | 13-956 | 13-980 | 13-956 |
| 3 | Throttle Fly | 14-214 | 14-214 | 14-214 | 14-214 | 14-214 | 14-214 | 14-214 | 14-214 | 14-214 |
| 4 | Screw (No. 8-32 x ¾" Fill. Head) (Throttle Stop) | 15-42 | 15-42 | 15-42 | 15-42 | 15-85 | 15-42 | 15-42 | 15-85 | 15-42 |
| 5 | Screw (No. 8-32 x 5/16" Fill. Head) (Choke Swivel) | 15-285 | 15-285 | 15-285 | 15-285 | 15-285 | 15-285 | 15-285 | 15-285 | 15-285 |
| 6 | Screw (No. 4-40 x ¼" Sems) (Throttle Fly) | 15-A46 | 15-A46 | 15-A46 | 15-A46 | 15-A46 | 15-A46 | 15-A46 | 15-A46 | 15-A46 |
| 7 | Screw (No. 4-40 x 3/16" Sems) (Choke Fly) | 15-A47 | 15-A47 | 15-A47 | 15-A47 | 15-A47 | 15-A47 | 15-A47 | 15-A47 | 15-A47 |
| 8 | Screw (No. 8-32 x 3/8" Fill. Head) (Sems) (Choke Bracket) | ..... | 15-A93 | 15-A93 | ..... | 15-A93 | 15-A93 | 15-A93 | 15-A93 | 15-A93 |
| 9 | Screw (No. 8-32 x 5/16" Sems) (Choke Bracket Clip) | ..... | 15-A99 | 15-A99 | ..... | 15-A99 | 15-A99 | 15-A99 | 15-A99 | 15-A99 |
| 10 | Gasket (Bowl Plug — 1) (Float Valve Seat — 1) | 16-4 | 16-4 | 16-4 | 16-4 | 16-4 | 16-4 | 16-4 | 16-4 | 16-4 |
| 11 | Gasket (Nozzle) | 16-456 | 16-456 | 16-456 | 16-456 | 16-456 | 16-456 | 16-456 | 16-456 | 16-456 |
| 12 | Gasket (Bowl) | 16-A105 | 16-A105 | 16-A105 | 16-A105 | 16-A105 | 16-A105 | 16-A105 | 16-A105 | 16-A105 |
| | Spring (Power Adjusting Needle) Not Illustrated | ..... | ..... | ..... | ..... | 24-A1 | ..... | ..... | 24-A1 | ..... |
| 13 | Spring (Choke Return) | 24-A107 | 24-213 | 24-213 | 24-A107 | 24-213 | 24-213 | 24-213 | 24-213 | 24-213 |
| 14 | Spring (Throttle Adj.) | 24-262 | 24-262 | 24-262 | 24-262 | 24-262 | 24-262 | 24-262 | 24-262 | 24-262 |
| 15 | Spring (Idle Adj. Needle) | 24-485 | 24-485 | 24-485 | 24-485 | 24-485 | 24-485 | 24-485 | 24-485 | 24-485 |
| 16 | Choke Shaft Assembly | 26-711 | 26-720 | 26-720 | 26-711 | 26-720 | 26-720 | 26-720 | 26-720 | 26-720 |
| 17 | Choke Fly Assembly | 27-559 | 27-559 | 27-559 | 27-559 | 27-559 | 27-559 | 27-559 | 27-559 | 27-559 |
| 18 | Choke Swivel | 28-49 | 28-49 | 28-49 | 28-49 | 28-49 | 28-49 | 28-49 | 28-49 | 28-49 |
| 19 | Choker Bracket Assembly | ..... | 29-537 | 29-537 | ..... | 29-537 | 29-537 | 29-537 | 29-537 | 29-537 |
| 20 | Float and Lever Assembly | 30-666 | 30-666 | 30-666 | 30-666 | 30-666 | 30-666 | 30-666 | 30-666 | 30-666 |
| 21 | Float Lever Shaft | 32-27 | 32-27 | 32-27 | 32-27 | 32-27 | 32-27 | 32-27 | 32-27 | 32-27 |
| 22 | Idle Adjusting Needle | 43-129 | 43-129 | 43-129 | 43-129 | 43-129 | 43-129 | 43-129 | 43-129 | 43-129 |
| | Power Adj. Needle Assembly Not Illustrated | ..... | ..... | ..... | ..... | 43-606 | ..... | ..... | 43-606 | ..... |
| 23 | Packing (Choke Shaft) | 44-38 | 44-38 | 44-38 | 44-38 | 44-38 | 44-38 | 44-38 | 44-38 | 44-38 |
| 24 | Packing (Throttle Shaft) | 44-38 | 44-38 | 44-38 | 44-38 | 44-38 | 44-38 | 44-63 | 44-38 | 44-63 |
| 25 | Main Nozzle | 47-300 | 47-300 | 47-300 | 47-300 | 47-311 | 47-300 | 47-395 | 47-311 | 47-311 |
| 26 | Power Jet | 49-279 | 49-283 | 49-283 | 49-283 | ..... | 49-224 | 49-253 | ..... | 49-374 |
| 27 | Cup (Choke Shaft) | 55-230 | 55-230 | 55-230 | 55-230 | 55-230 | 55-230 | 55-230 | 55-230 | 55-230 |
| 28 | Packing Retainer (Throttle Shaft) | 55-231 | 55-231 | 55-231 | 55-231 | 55-231 | 55-231 | 55-231 | 55-231 | 55-231 |
| 29 | Bushing (Throttle Shaft) | 60-439 | 60-439 | 60-439 | 60-439 | 60-439 | 60-439 | 60-439 | 60-439 | 60-439 |
| 30 | Fuel Bowl | 65-172 | 65-172 | 65-172 | 65-172 | 65-700 | 65-172 | 65-172 | 65-700 | 65-172 |
| 31 | Plug—Bowl Retaining | 80-166 | 80-166 | 80-166 | 80-166 | 80-166 | 80-166 | 80-166 | 80-166 | 80-166 |
| 32 | Cotter (Choke Swivel) | 82-16 | 82-16 | 82-16 | 82-16 | 82-16 | 82-16 | 82-16 | 82-16 | 82-16 |
| 33 | Matched Float Valve, Seat and Gasket Assembly | 233-536 | 233-536 | 233-536 | 233-536 | 233-536 | 233-536 | 233-536 | 233-536 | 233-536 |
| | Package Repair Kit | 286-756 | 286-776 | 286-777 | 286-756 | 286-831 | 286-776 | 286-776 | 286-831 | 286-1025 |
| | Gasket Assortment | 16-649 | 16-649 | 16-649 | 16-649 | 16-649 | 16-649 | 16-649 | 16-649 | 16-649 |

# ZENITH 87A8 CARBURETOR

## FOR WISCONSIN MOTOR CORPORATION

The Zenith 87-Series is a horizontal carburetor with a concentric fuel bowl. It is a "balanced" carburetor, because all air for fuel chamber and metering well ventilation and idling must come through the air cleaner. Air cleaner restrictions have a minimum influence on the fuel-air ratio when a carburetor is thus "balanced".

The main jet and discharge jet are centrally located. The metering well which completely surrounds the discharge jet is in the center of the fuel bowl assembly. This construction permits extremely high angle operation in any direction.

The venturi, which is part of the throttle body casting, measures the volume of air that passes through the carburetor. In selecting the venturi size, the smallest size that will permit full power development should be used.

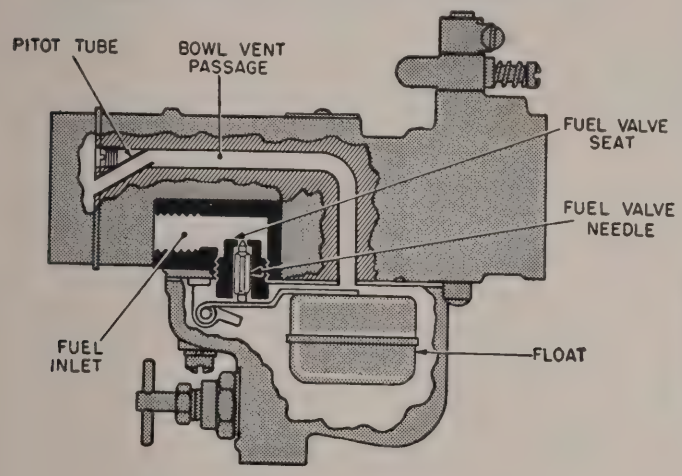


FUEL SUPPLY SYSTEM

**FUEL SUPPLY SYSTEM.** Fuel under normal pressure entering the float chamber through the fuel valve seat is controlled by the twin float which, moving on its axle, closes the needle valve when the fuel reaches the proper level in the bowl.

**IDLING SYSTEM.** At idling speeds the throttle plate is almost closed, thus a very high suction exists at the edge of the throttle plate. At this point the idle discharge orifices are located. All fuel for idling and part throttle operation is supplied through the main jet. Fuel from the float chamber flows through the main jet into the metering well. Fuel for idling is drawn from this well through the calibration, or metering orifice, in the center of the idling jet. As the fuel reaches the idling channel it is mixed with air which is admitted through a calibrated orifice in the channel from the inside of the air intake to form an emulsion. This emulsion is discharged into the air stream, to form the idling mixture, through two holes, one of which is controlled by the idle adjusting needle. Turning the adjusting needle counter-clockwise (out) permits more of the emulsion to reach the air stream and make the idling mixture richer while turning the needle in (clockwise) cuts off the amount of the emulsion reaching the air stream and makes the mixture leaner.

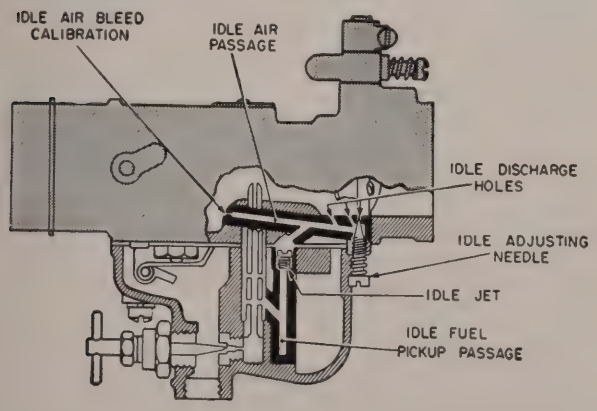


IDLE SYSTEM

**HIGH SPEED SYSTEM.** As the throttle is opened, the suction on the idling system diminishes, but the increased volume of air entering the engine through the venturi creates sufficient vacuum (suction) on the discharge jet to draw an emulsion of fuel and air from the metering well which receives its fuel from the main jet and its air from the well vent. The flow characteristics of the discharge jet are influenced by the size, location, and number of holes in the sides of that part of the jet which is in the metering well, as well as by the sizes of the discharge jet orifice, the size of the main jet, and the size of the well vent. The well vent is located in the air intake and permits air to enter the top of the metering well around the outside of the discharge jet. The flow of fuel through the main jet is controlled by the main jet adjustment.

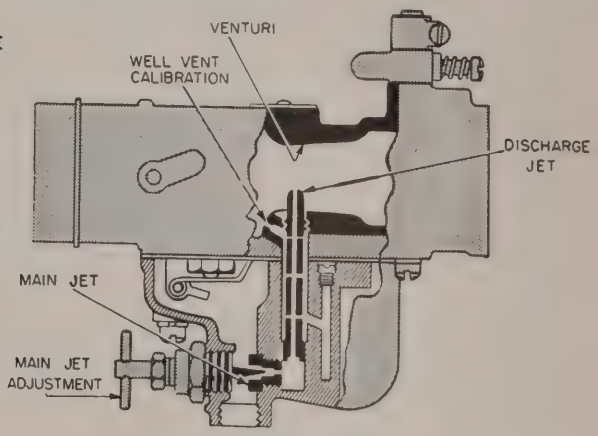


HIGH SPEED SYSTEM

**CHOKE SYSTEM.** Starting a cold engine requires a much richer mixture of fuel and air. Moving the choke lever to close the choke plate restricts the air entering the carburetor, except at the pitot tube to the bowl vent, and increases the suction on the idling system which makes the mixture richer.

**STARTING THE ENGINE.** Before cranking the engine, the carburetor throttle should be opened a little to expose both idle discharge ports to suction. The choke should be fully closed until the engine starts, then opened a little to prevent stalling from being over-choked, then when the engine is fully warmed up the choke can be returned to wide open position and the throttle closed to the idling position.

**ADJUSTMENTS.** Adjust the throttle stop screw to obtain the desired idling speed by turning the screw in (clock-

wise) to increase the speed and out (counter-clockwise) to decrease the engine speed.

Adjust the idle adjusting needle to obtain smooth idling of the engine at idling speed. Turn the needle out (counter-

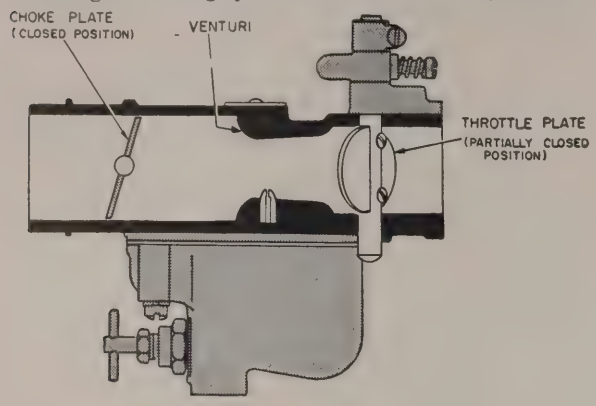


CHOKE SYSTEM

clockwise) to make the mixture richer, and in (clockwise) to make it leaner.

Adjust the main jet adjustment for full power of the engine while under a load. Turning the adjusting needle out (counter-clockwise) makes the mixture richer while turning the needle in (clockwise) cuts off the flow of fuel to make the mixture leaner.

**NOTE:** Do not try to operate on a very lean mixture; better performance and better fuel economy will be obtained if the mixture is not too lean.

## DISASSEMBLY

### A. IDENTIFY CARBURETOR

(a) Check numbers on metal identification disk riveted to top of throttle body. The inside number next to the rivet is the Zenith assembly number and the one next to the outer edge of the disk is the vehicle manufacturer's.

### B. DISASSEMBLED VIEWS

(a) The disassembled view will identify the various component parts and show the relation to assembly. Use the disassembled view to identify and locate parts when performing the disassembly and reassembly operations.

### C. SEPARATE CARBURETOR BODIES

(a) Remove the three bowl assembly screws (45 & 46) and separate fuel bowl (39) from throttle body (26).

### D. DISASSEMBLE FUEL BOWL

(a) Remove the main jet adjustment (43) and fibre washer (42), using a 9/16" open end wrench.
(b) Remove the main jet (41) and fibre washer (40), using Zenith Tool No. C161-83 main jet wrench.
(c) Remove the Idle Jet (38), using a small screwdriver.
(d) Remove the bowl drain plug (44).

### E. DISASSEMBLE THROTTLE BODY

(a) Remove the float axle (35) by pressing against the end with the blade of a screwdriver.
(b) Remove the float (36).
(c) Remove the fuel valve needle (31), using the fingers.
(d) Remove the fuel bowl to throttle body gasket (37).
(e) Remove the main discharge jet (32), using a small screwdriver.
(f) Remove the fuel valve seat (31) and fibre washer (30), using Zenith Tool No. C161-85.
(g) Remove the idle adjusting needle (17) and spring (18).

## CLEAN AND INSPECT PARTS

### A. CLEAN PARTS

(a) Clean all metal parts thoroughly with cleaning solution and rinse in solvent.
(b) Blow out all passages in the air intake assembly, fuel bowl assembly and throttle body. **NOTE:** Be sure all carbon deposits have been removed from throttle bore and idle discharge holes. It is advisable to reverse flow of compressed air in all passages to insure all dirt has been removed. Never use a wire or drill to clean out jets.

### B. INSPECT PARTS

(a) **Float Assembly.** Replace float assembly if loaded with gasoline, damaged, or if float axle bearing is worn excessively. Inspect top side of float lever for wear where it contacts fuel valve needle.
(b) **Float Axle.** Replace if any wear can be visually detected on the bearing surface.
(c) **Fuel Valve Seat & Needle Assembly.** Replace fuel valve seat and needle because both parts wear and may cause improper float level.
(d) **Idling Adjusting Needle and Spring.** Inspect point of needle. This must be smooth and free of ridges.
(e) **Gaskets and Fibre Washers.** Replace all gaskets and fibre washers every time the carburetor is disassembled.
(f) **Check Specifications.** Verify the correctness of the following parts. Numbers will be found on the parts. **Venturi; Main Jet; Idling Jet; and Fuel Valve Seat.**

## REASSEMBLY

### A. REASSEMBLE THROTTLE BODY

(a) Install the fuel valve seat (31) and fibre washer (30), using Zenith Tool No. C161-85.
(b) Install the main discharge jet (32), using a small screwdriver.
(c) Install fuel valve needle in seat (31), followed by float (36) and float axle (35). **NOTE:** Insert tapered end of float axle (35) into float bracket on side opposite slot and push through the other side. Press float axle (35) into slotted side until the axle is centered in bracket.
(d) **Fuel Level.** Check position of float assembly (36) for correct measurement to obtain proper fuel level using a depth gage. **NOTE: Do not bend, twist, or apply pressure** on the float body.
With bowl cover assembly (26) in an inverted position, viewed from free end of float (36), the float body must be centered and at right angles to the machined surface. The float setting is measured from the machined surface (no gasket) of float bowl cover to top side of float body at highest point. This measurement should be 31/32", plus or minus 1/32".
(e) **Bending Float Lever.** To increase or decrease distance between float body (36) and machined surface (26) use long nosed pliers and bend lever close to float body.
**NOTE:** Replace with new float if position is off more than 1/16".
(f) Install throttle body to fuel bowl assembly gasket (37) on machined surface of throttle body (26).
(g) Install the idle adjusting needle (17) and spring (18).

### B. REASSEMBLE FUEL BOWL

(a) Install the main jet (41) and fibre washer (40), using Zenith Tool No. C161-83 main jet wrench.
(b) Install the main jet adjustment (43) and fibre washer (42), using a 9/16" open end wrench.
(c) Install the idle jet (38), using a small screwdriver.
(d) Install the bowl drain plug (44).

### C. REASSEMBLE CARBURETOR BODIES

(a) Install the three bowl assembly screws (45 & 46) through the fuel bowl and into the throttle body and draw down firmly and evenly.

### SPECIAL TOOLS

The special tools recommended for the 87-Series carburetors are:

1. C161-83 Main Jet Wrench.
2. C161-85 Fuel Valve Seat Wrench.

# Parts List for Model 87A8 Zenith Carburetor

## (FOR WISCONSIN MOTOR CORP.)

| ZENITH No. | WISCONSIN No. |
|---|---|
| 11288 | L-57 |
| 11532 | L-57-1 |

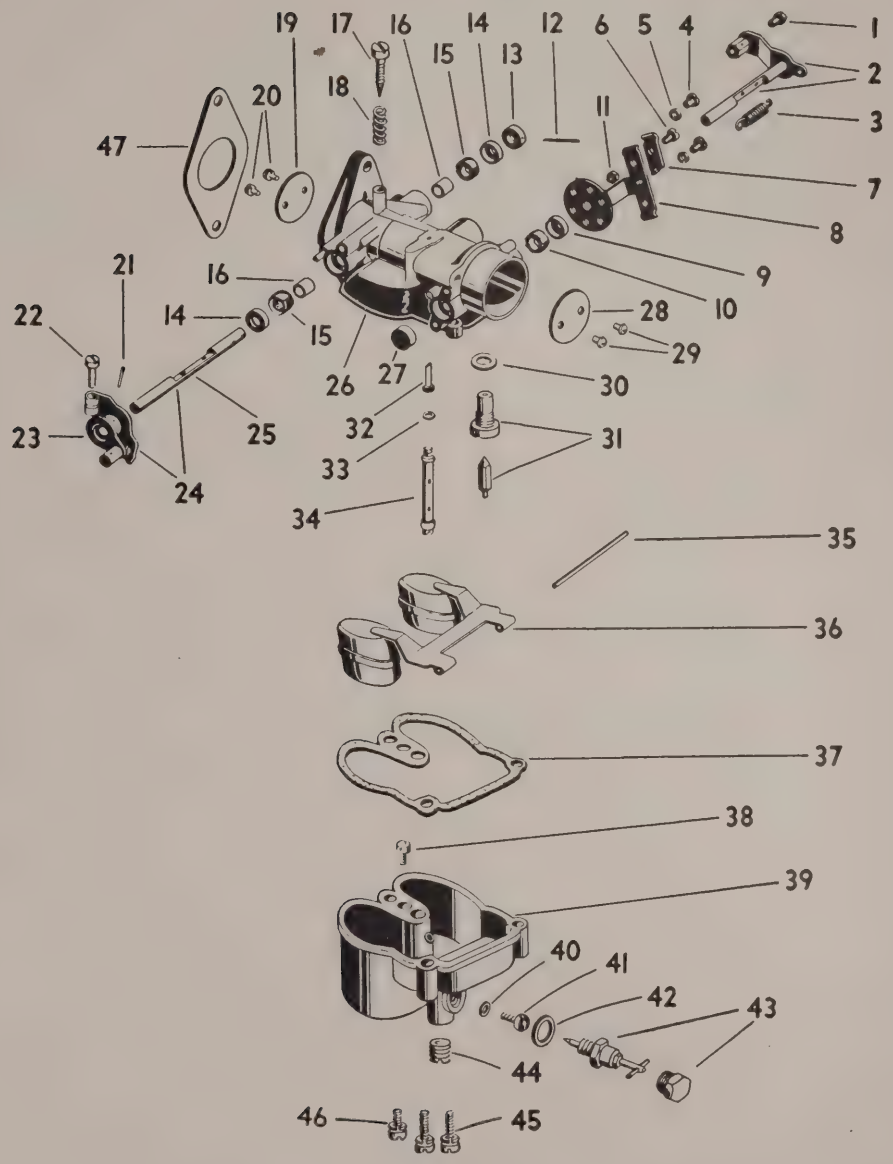


| Ref. No. | Part No. | Part Name |
|---|---|---|
| 1 | T8S8-6 | Screw—Lever Swivel |
| 2 | C108-130 | Shaft and Lever—Choke |
| 3 | C112-6 | Spring—Choke Lever |
| 4 | C140-58 | Screw—Bracket Assembly |
| 5 | T41-8 | Lockwasher—Bracket Screw |
| 6 | T1S8-8 | Screw—Tube Clamp |
| 7 | C110-7 | Clamp—Bracket Tube |
| 8 | C109-60 | Bracket—Choke |
| 9 | C131-4x2 | Retainer—Choke Shaft Packing |
| 10 | CT57-4 | Washer—Choke Shaft Packing |

| Ref. No. | Part No. | Part Name |
|---|---|---|
| 11 | T21S8 | Nut—Clamp Screw |
| 12 | †CT63-9 | Taper Pin—Thrust Washer |
| 13 | †C130-4 | Washer—Shaft Thrust |
| 14 | CT52-53 | Retainer—Throttle Shaft Packing |
| 15 | CT48-9 | Washer—Throttle Shaft Packing |
| 16 | C9-72 | Bushing—Throttle Shaft |
| 17 | †C46-49 | Needle—Idle Adjusting |
| 18 | C111-155 | Spring—Adjusting Needle |
| 19 | C21-42 | Plate—Throttle |
| 20 | †T315B5-3 | Screw—Throttle Plate |
| 21 | CT63-9 | Taper Pin—Throttle Lever |
| 22 | T1S8-10 | Screw—Lever Stop |
| 23 | CR27-241 | Lever and Stop—Throttle |
| 24 | C29-1037 | Shaft and Lever—Throttle (Items 21, 22, 23, 25) |
| 25 | C23-533 | Shaft—Throttle |
| 26 | B12- | Body—Throttle Specify Assembly Number (Includes Items 9 thru 27) |
| 27 | CR37-1x1 | Plug—Choke Shaft Hole |
| 28 | C102-113 | Plate—Choke |
| 29 | †T315B5-3 | Screw—Choke Plate |
| 30 | T56-20 | Fiber Washer—Fuel Valve Seat |
| 31 | †C81-17-35 | Valve and Seat—Fuel |
| 32 | C66-96-40 | Jet—Discharge (11288) |
| 32 | C66-104-42 | Jet—Discharge (11532) |
| 33 | †T56-73 | Fiber Washer—Well |
| 34 | C76-50-1 | Well—Metering |
| 35 | †C120-18 | Axle—Float |
| 36 | C85-97 | Float |
| 37 | †C142-55 | Gasket—Bowl to Body |
| 38 | †C52-2-12 | Jet—Idle |
| 39 | B3-98A | Bowl—Fuel |
| 40 | †T56-24 | Fiber Washer—Main Jet |
| 41 | †C52-7-34 | Jet—Main (11288) |
| 41 | †C52-7-38 | Jet—Main (11532) |
| 42 | †T56-23 | Fiber Washer—Passage Plug |
| 43 | C138-23 | Plug—Main Passage |
| 44 | CT91-5 | Plug—⅛″ Pipe (Bowl Drain) |
| 45 | †T301S8-14 | Screw—Bowl to Body (Long) |
| 46 | T301S8-9 | Screw—Bowl to Body (Short) |
| 47 | †C141-4-6 | Gasket—Flange |
| | C181-296 | Gasket Set |
| | K-11288 | Repair Kit (11288) |
| | K-11532 | Repair Kit (11532) |

† Parts Included in Repair Kit.

The Idle Air Bleed Bushing and Well Vent Bushing are calibrated parts of the Throttle Body (item 26) and are not readily removable.

Zenith service parts can be obtained promptly through our central and service distributors located in principal cities.


# ZENITH CARBURETOR DIVISION

696 HART AVENUE — Bendix AVIATION CORPORATION — DETROIT 14, MICHIGAN

*Manufacturers of Zenith Carburetors and Filters*

January, 1955 — THIS SUPERSEDES BULLETIN No. Z-300-B OF OCTOBER, 1953 — Printed in U.S.A.

# FAIRBANKS-MORSE

# TYPES FM-XV4B7 AND FM-XVE4B7G MAGNETOS

## Adapted only to Wisconsin VE4, VF4, and VP4D Engines

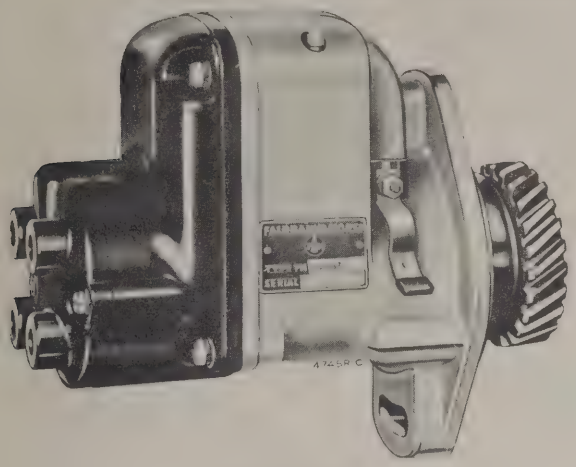

FM-XV4B7

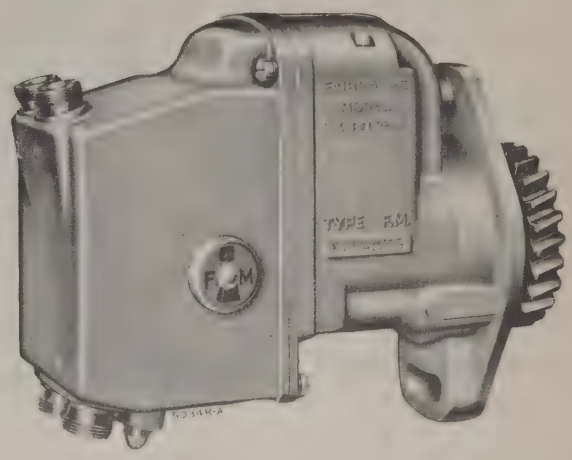

FM-XVE4B7G

## Field Service and Adjustment Information

GENERAL DESCRIPTION

Types FM-XV4B7 and FM-XVE4B7G magnetos are special units designed and built for use on Engine Models VE4, VF4, and VP4D, manufactured by the Wisconsin Motor Corporation. These engines are all modifications of the same basic design, each having a firing interval of 180°-270°-180°-90°. Types FM-XV4B7 and FM-XVE4B7G magnetos, each having a four pole rotor and a four lobe cam, meet this requirement by producing four sparks per revolution of the rotor, which runs at crankshaft speed. In a complete cycle of two engine revolutions, four sparks are used for ignition and four fire in the exhaust. These magnetos have the standard SAE flange mounting, but have a special coupling and drive gear arrangement which requires an extended rotor shaft.

SERVICE PROCEDURE

Improper functioning of the magneto is often believed to be the cause of engine difficulty arising from other sources, such as a flooded carburetor, insufficient fuel or air, loose ignition connections, or a defective spark plug. Since a brief engine inspection will often localize the trouble before the magneto is reached, it prevents maladjustment of parts in good condition. Type FM-X magnetos are built in sealed frames and should be opened only when it is certain that the ignition spark produced is unsatisfactory. This condition may be determined by ignition spark tests which are easily made in the field.

TESTING THE IGNITION SPARK

With properly adjusted spark plugs in good condition, the ignition spark should be strong enough to bridge a short gap in addition to the actual spark plug discharge. This may be determined by holding the end of the ignition cable not more than 1/16 in. away from the spark plug terminal. The engine should not misfire when this is done. Ignition tests made while any part of the system is wet are useless.

TESTING THE MAGNETO SPARK

Remove all the ignition cables from the magneto end cap sockets and insert a short, stiff wire in one of the sockets. Bend this wire to within 1/8 in. of the engine block. Turn the engine over slowly one complete revolution and watch carefully for the spark discharge which should occur every time the impulse coupling releases. Repeat this test with the wire in each of the other sockets. If a strong spark is observed with the wire in each socket, it is recommended that the magneto be eliminated as the source of difficulty and that the cables, terminals, and spark plugs be thoroughly inspected. If no spark occurs, the ignition switch should be examined to make certain it has not accidentally become closed.

END CAP COVER REMOVAL

If no spark is obtained from one or more of the magneto terminals, remove the end cap cover, taking care not to damage the gasket. Remove the distributor rotor and clean the distributor compartment thoroughly, observing whether the air passages are open or clogged. IT IS EXTREMELY IMPORTANT THAT THESE AIR PASSAGES BE KEPT FREE OF DIRT AND OTHER FOREIGN MATTER. Examine the high-tension lead brush and replace it if noticeably worn or damaged. This brush should move freely in its holder and should be under slight spring pressure.

SERVICE OF BREAKER POINTS

Before examining the breaker points, it is first necessary to remove the end cap, which is sealed to the metal frame by a gasket joint. The breaker points should then be inspected for evidence of pitting or pyramiding. A small tungsten file or fine stone may be used to resurface the points except in the case of badly worn or pitted points, which should be replaced. If it is necessary to resurface or replace the breaker points, it will also be necessary to readjust them to their proper clearance, which is 0.015 in. at full separation. This adjustment is made in the following manner: Loosen the locking screws identified in Fig. 1 shown below. Then move the contact support until the proper breaker point clearance is obtained. This is accomplished by means of a screwdriver inserted in the horizontal slot at the bottom of the contact support and pivoted between the two small bosses on the

Instructions No. 2907W
June 15, 1952
Reprinted June 1, 1954

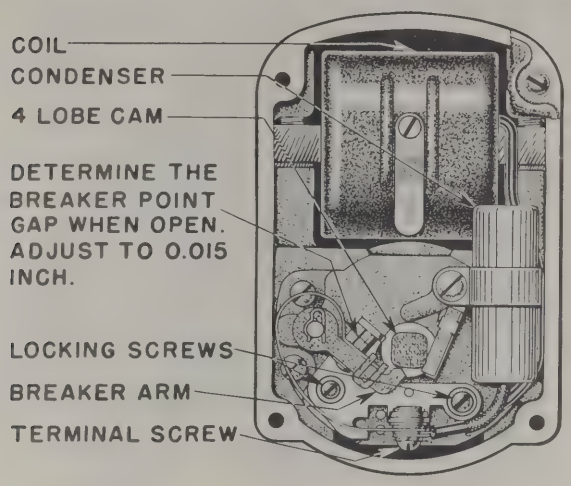


Fig. 1. End View of Type FM-XV4B Magneto.

bearing support. Lock the assembly in place by tightening the locking screws and take a final measurement of the breaker point gap after the locking screws are tightened.

FURTHER FIELD SERVICE NOT RECOMMENDED

The cam felt wick, if dry or hard, should be replaced by a new factory-impregnated wick. This is done by substituting a new cam wick and holder assembly for the old assembly. Other than this, Type FM-XV magnetos do not require field lubrication and any attempt to oil or grease the bearings is inadvisable. The lubricants should be renewed only during a complete overhaul of the magneto by a Factory-Authorized Magneto Service Station.

SEALING MAGNETO

Before replacing the end cap on the magneto frame, clean the contact surfaces between the cap and the frame. Then coat both contact surfaces completely with Fairbanks-Morse FMCO2 Gasket Varnish, place a new gasket in the joint, and mount the end cap on the frame, tightening the four screws securely.

SPECIAL DRIVE GEAR

Types FM-XV4B7 and FM-XVE4B7G magnetos, as adapted to engines manufactured by the Wisconsin Motor Corporation, are equipped with special drive gears mounted directly on the impulse coupling. The gear is a slip fit on the extended coupling nut, since movement of the gear with respect to the coupling nut and rotor shaft occurs during the impulse period. If it is necessary at any time to remove the drive gear, special care must be exercised in reassembly. Remove the end cap cover (the entire end cap on radio shielded units) and turn the rotor until the contact segment is in firing position for No. 1 cylinder as shown in Fig. 2. Notice that the No. 1 firing position of the contact segment is diametrically opposed in the two magnetos. With the distributor rotor in the proper position fit the gear to the impulse coupling lugs so that the prick punch mark on the rim of the gear is in the position shown in Fig. 2.

RADIO-SHIELDED MAGNETOS

Complete radio shielding of the ignition system is required in numerous applications, the necessary modification of the magneto being designated as the Type FM-XVE4B7G. On this unit the plastic end cap and end cap cover are replaced by an all-metal end cap in which an insulated distributor block is fitted. Special outlets are provided for the high tension leads so that connection can be made to the shielded cables. A push-button ground terminal is located on the lower side of the end cap. In addition, an auxiliary terminal is provided to connect a ground wire from the magneto to a remote grounding switch.

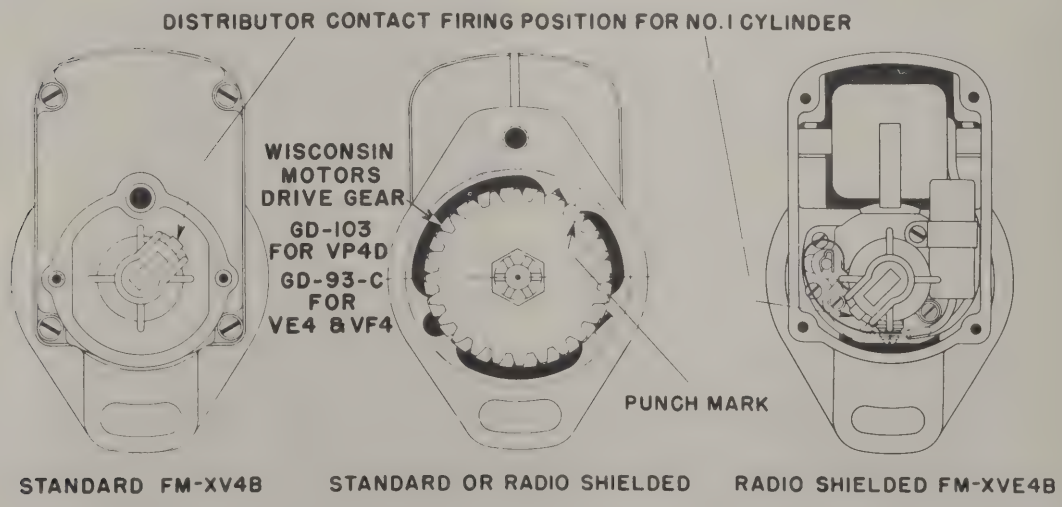


Fig. 2. Distributor Contact Firing Position and Drive Gear Marking.

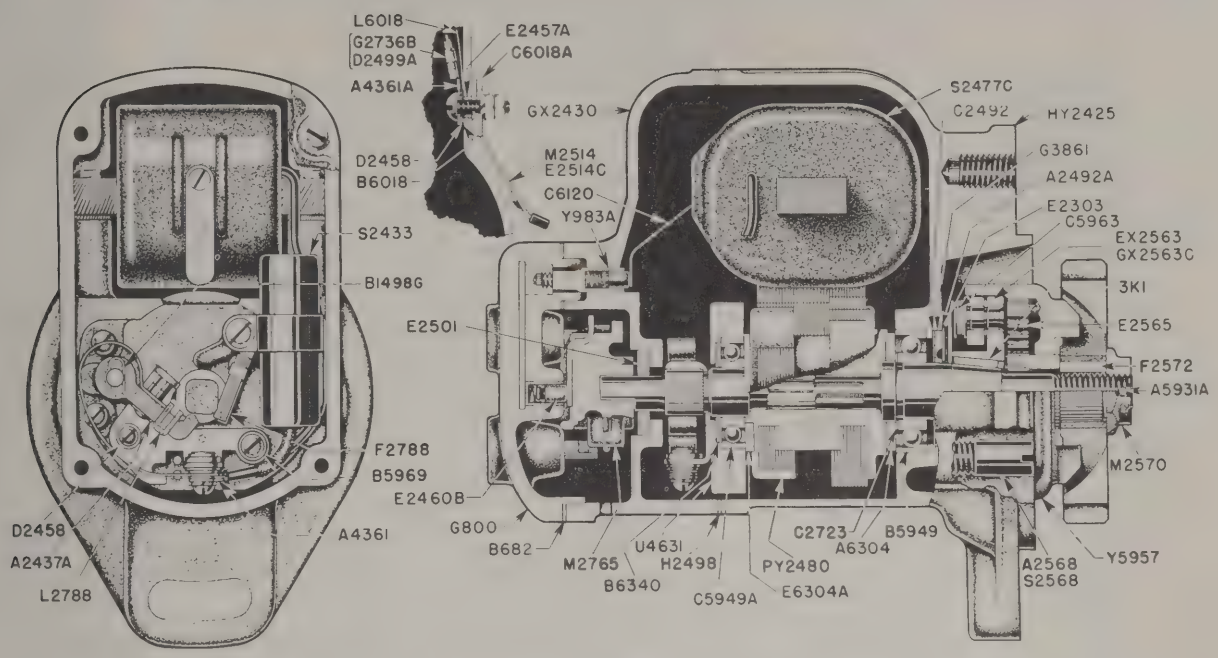


# Type FM-XV4B7 Magneto (Standard)

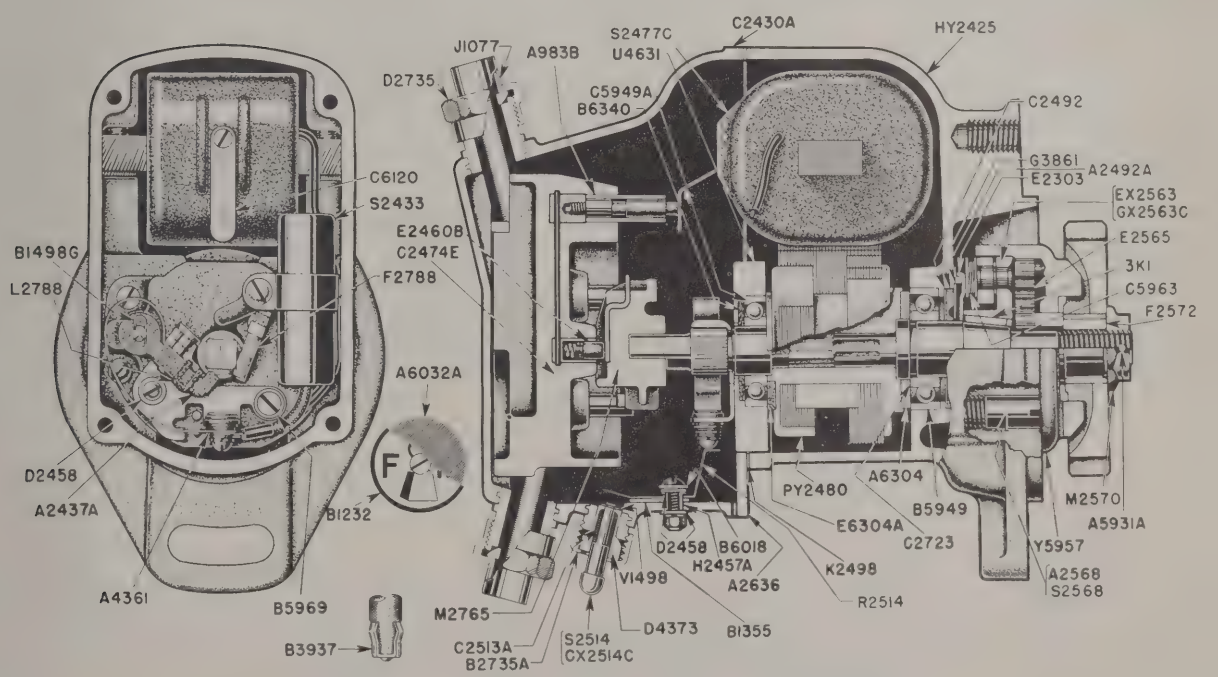


# Type FM-XVE4B7G Magneto (Radio Shielded)

| Order by Part No. | Name of Part | No. Used FM-XV4B7 | No. Used FM-XVE4B7G |
|---|---|---|---|
| B682 | End Cap Cover Gasket | 1 | - |
| 6800 | End Cap Cover | 1 | - |
| 8S0D | End Cap Cover Screw (#8-32x9/16") | 2 | - |
| A283B | High Tension Lead Assembly | - | 1 |
| Y283A | High Tension Lead Rod | 1 | - |
| J1077 | Cable Outlet Ferrule | - | 4 |
| B1232 | Vent Screen Shield | - | 2 |
| 6S6N | Vent Screen Shield Screw (#6-32x3/8") | - | 2 |
| B1355 | Ground Switch Strip Guide | - | 1 |
| V1498 | Ground Switch Snap Ring | - | 1 |
| B1498G | Fulcrum Pin Snap Ring | 1 | 1 |
| E2303 | Oil Slinger Baffle Disc* | 1 | 1 |
| HY2425 | Frame | 1 | 1 |
| C2430A | End Cap (Inc. B1232, A6032A, 6S6N) | - | 1 |
| GX2430 | End Cap | 1 | - |
| 10S5A | End Cap Screw (#10-24x5/8") | - | 2 |
| 10S10A | End Cap Screw (#10-24x7/8") | - | 2 |
| 10S12D | End Cap Screw (#10-24x1") | 4 | - |
| S2433 | Condenser Assembly | 1 | 1 |
| 8S6D | Condenser Mounting Screw (#8-32x3/8") | 1 | 1 |
| A2437A | Breaker Arm, Stationary Bracket, and Points | 1 | 1 |
| 6S5N | Breaker Arm Terminal Screw (#6-32x5/16") | 1 | 1 |
| 6LW2 | Breaker Arm Terminal Screw Lockwasher | 1 | 1 |
| 6S6N | Contact Support Locking Screw (#6-32x3/8") | 1 | 1 |
| 6LW2 | Contact Support Locking Screw Lockwasher | 1 | 1 |
| 8S6N | Contact Support Locking Screw (#8-32x3/8") | 1 | 1 |
| 8LW3 | Contact Support Locking Screw Lockwasher | 1 | 1 |
| E2457A | Primary Ground Screw Bushing | 1 | - |
| H2457A | Primary Ground Screw Bushing* | - | 1 |
| D2458 | Contact Support Locking Screw Washer | 1 | 1 |
| D2459 | Primary Ground Switch Plate Washer | 1 | 2 |
| E2460B | Coil Lead Brush and Spring | 1 | 1 |
| C2474B | Distributor Block* | - | 1 |
| 8S0D | Distributor Block Screw (#8-32x1/2") | - | 4 |
| H2477 | Coil Assembly* (Taped) | 1 | 1 |
| H2477C | Coil Assembly* (Molded) (H2477C inc. C6120, 6S3N, 6LW1) | 1 | 1 |
| 25SS14A | Coil Bridge Setscrew (1/4-20x7/8") | 2 | 2 |
| FY2480 | Magnetic Rotor Assembly | 1 | 1 |
| A2492A | Rotor Shaft Seal Outer Washer | 1 | 1 |
| C2492 | Rotor Shaft Seal Inner Washer | 1 | 1 |
| H2498 | End Cap to Frame Gasket | 1 | - |
| K2498 | End Cap to Frame Gasket (Lead) | - | 1 |
| D2499A | Primary Terminal Wire Assembly (Inc. G2736B, A4361, A4361A) | 1 | - |
| E2501 | Distributor Shaft Seal | 1 | - |
| S2513A | Ground Switch Button Spring | - | 1 |
| CX2514C | Ground Switch Push Button Assembly (Inc. V1498, C2513A, S2514, D4373) | - | 1 |
| E2514C | Insulated Lever Ground Switch Assembly (Inc. M2514, E2457A, D2458, A4361A, B6018, C6018A, 6S10N, 6N1, 6LW1) | 1 | - |
| M2514 | Ground Switch Insulated Lever | 1 | - |
| R2514 | Primary Ground Switch Strip | - | 1 |
| S2514 | Primary Ground Switch Push Button | - | 1 |
| 6S8N | Ground Switch Screw (#6-32x1/2") | - | 1 |
| 6S12N | Ground Switch Screw (#6-32x3/4") | 1 | - |
| 6N1 | Ground Screw Nut (#6-32) | 3 | 1 |
| 6LW1 | Ground Screw Lockwasher | - | 1 |
| 6LW2 | Ground Screw Lockwasher | 1 | - |
| EX2563 | Impulse Coupling Hub (UB-9, CW) (EX2563 inc. C5963) | 1 | 1 |
| GX2563C | Impulse Coupling Assembly (UB-9, CW) (GX2563C inc. EX2563, E2565, Y5957) | 1 | 1 |
| E2565 | Impulse Coupling Drive Spring | 1 | 1 |
| A2568 | Impulse Coupling Pawl Stop Pin | 1 | 1 |
| S2568 | Impulse Coupling Pawl Stop Pin | 1 | 1 |
| M2570 | Impulse Coupling Nut | 1 | 1 |
| F2572 | Impulse Coupling Bushing | 1 | 1 |
| A2636 | End Cap Extension Plate | - | 1 |
| 10S6G | End Cap Extension Plate Screw (#10-24x3/8") | - | 2 |
| C2723 | Rotor Shaft Shim (use as needed) | 2 | 2 |
| B2735A | Primary Ground Cable Outlet Nut | - | 1 |
| D2735 | High Tension Cable Outlet Nut | - | 4 |
| E2736 | Coil Lead Wire Tube (Taped Coil) | 1 | 1 |
| G2736B | Primary Terminal Wire Tube | 1 | - |
| M2765 | Distributor Rotor* | 1 | 1 |
| F2788 | Cam Wick and Holder Assembly | 1 | 1 |
| L2788 | Breaker Arm Felt Wick | 1 | 1 |
| G3861 | Rotor Shaft Seal | 1 | 1 |
| B3937 | Cable Clip | - | 4 |
| A4361 | Lead Wire Terminal for No. 8 Screw | 3 | 2 |
| A4361A | Lead Wire Terminal for No. 6 Screw | 1 | - |
| D4373 | Primary Ground Switch Bushing | - | 1 |
| U4631 | Bearing Support Assembly | 1 | 1 |
| 8S6D | Bearing Support Screw (#8-32x3/8") | 4 | 4 |
| A5931A | Impulse Coupling Nut Lockwire | 1 | 1 |
| B5949 | Rotor Drive End Ball Bearing | 1 | 1 |
| C5949A | Rotor Ball Bearing (Opp. Drive End) | 1 | 1 |
| Y5957 | Impulse Coupling Shell | 1 | 1 |
| C5963 | Impulse Coupling Pawl Spring | 2 | 2 |
| D5969 | Contact Support Locking Screw Washer | 1 | 1 |
| B6018 | Ground Screw Insulating Washer | 1 | - |
| C6018A | Ground Screw Insulating Block | 1 | - |
| L6018 | Ground Switch Terminal Insulator | 1 | - |
| A6032A | Vent Screen | - | 2 |
| C6120 | Coil Clip (Molded Coil) | 1 | 1 |
| 6S3N | Coil Clip Screw (#6-32x3/16") | 1 | 1 |
| 6LW1 | Coil Clip Screw Lockwasher | 1 | 1 |
| A6304 | Rotor Bearing Seal (Drive End) | 1 | 1 |
| B6304A | Rotor Bearing Seal (Opp. Drive End) | 1 | 1 |
| B6340 | Bearing Support Felt, Seal | 1 | 1 |
| 3K1 | Key (Rotor to Impulse Coupling) | 1 | 1 |

*Fungus treated part

# FAIRBANKS, MORSE & CO.

*Manufacturers*

Executive Offices
Chicago, Illinois

Magneto Sales & Factory
Beloit, Wisconsin

329585-125420M-BDN

Printed in U.S.A.

# WICO MODEL XH-4 MAGNETOS

## FOR WISCONSIN MODELS VE4, VF4 and VP4D ENGINES

## *INSTRUCTIONS*

### TIMING

The magneto is properly timed to the engine at the factory. If it becomes necessary to retime the magneto to the engine, refer to the diagram and instructions in the engine instruction book.

### LUBRICATION

The only lubricating point in the magneto is the cam wiper felt *(Ref. No. 18)*. This felt, which lubricates the breaker arm at point of contact with the cam, should be replaced whenever it is necessary to replace the breaker contacts.

### IMPORTANT

Incorrectly adjusted spark plug gaps cause magneto failure more frequently than any other condition.

Spark plugs should be inspected at frequent intervals, the size of the gap should be carefully checked and adjusted and the plugs thoroughly cleaned.

All oil, grease, and dirt should frequently be wiped off the magneto, lead wires, and spark plug insulators. Keeping these parts clean and the spark plugs properly adjusted will improve the engine performance and at the same time will prolong the life of the magneto.

### DISTRIBUTOR CAP AND ARM

The distributor cap *(Ref. No. 42)* may be removed by loosening the three screws *(Ref. No. 38)* which hold it in place. The distributor arm *(Ref. No. 29)* can then be removed from the shaft. When replacing the distributor arm be sure that the flat inside of the arm is lined up with the flat on the cam.

### BREAKER CONTACTS – REPLACEMENT AND ADJUSTMENT

The breaker contacts should be adjusted to .015" when fully opened. To adjust the contacts, loosen the two clamp screws *(Ref. No. 44)* enough so that the contact plate can be moved.

Insert the end of a small screw driver in the adjusting slot and open or close the contacts by moving the plate until the opening is .015", measuring with a feeler gauge of that thickness, tighten the two clamp screws.

To replace the contacts remove the breaker spring clamp screw *(Ref. No. 48)*, the breaker arm lock *(Ref. No. 17)* and washer *(Ref. No. 13)*. Then lift the breaker arm from its pivot. Remove the spacing washer, 5717, and the two breaker plate clamp screws *(Ref. No. 44)*. The breaker plate can then be removed.

If the contacts need replacing it is recommended that both the fixed contact and the breaker arm be replaced at the same time, using replacement breaker set X5996 *(Ref. No. 46)*.

After assembly the contacts should be adjusted as described above. The contacts should be kept clean at all times. Lacquer thinner is an ideal cleaner for this purpose. Use **WICO** tool S-5449, to adjust the alignment of the contacts so that both surfaces meet squarely.

### CONDENSER

To remove the condenser *(Ref. No. 36)* first disconnect the condenser lead by removing the breaker arm spring screw *(Ref. No. 48)*, then remove the two condenser clamp screws *(Ref. No. 20)* and the condenser clamp *(Ref. No. 30)*. When replacing the condenser make sure it is properly placed between the two locating bosses and that the clamp screws are securely tightened.

### COIL AND COIL CORE

The coil and coil core must be removed from the magneto housing as a unit. After the distributor cap, distributor arm, and breaker shield have been removed and the primary wire disconnected from the breaker arm spring terminal by removing screw *(Ref. No. 48)*, take out the two coil core clamp screws *(Ref. No. 21)* and remove the clamps *(Ref. No. 40)*. The coil and core can then be pulled from the housing. When replacing this group make sure that the bare primary wire is connected under the core clamp screw and that the insulated wire is connected to the breaker arm spring terminal.

### REMOVAL OF COIL FROM CORE

The coil *(Ref. No. 43)* is held tight on the core *(Ref. No. 28)* by two wedges, 10383. It will be necessary to press against the coil core with considerable force to remove it from the coil. The coil should be supported in such a way that there is no danger of the primary of the coil being pushed out of the secondary.

When replacing the coil on the coil core, slide it on then press in the two coil wedges, one on each end, until they are flush with the primary of the coil.

**WICO ELECTRIC COMPANY** WEST SPRINGFIELD, MASSACHUSETTS, U.S.A.

# WICO MODEL XH-4, NO. XH-1343 MAGNETO
# WISCONSIN MOTOR CORPORATION NO. Y-54

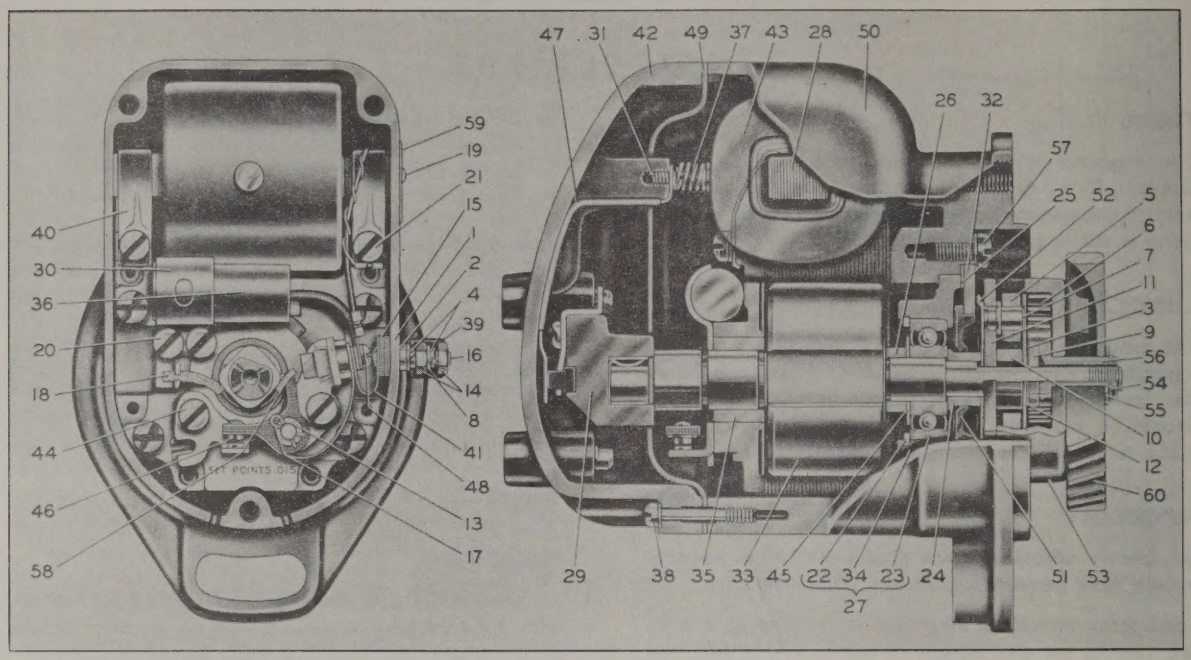


| Ref No. | Wico Part No. | Description | No Req. |
|---|---|---|---|
| 1 | M-34X | SPACING WASHER for ground stud | 2 |
| 2 | M-35X | GROUND STUD WASHER | 1 |
| 3 | M-42XA | SPACING WASHER for driven flange | 1 |
| 4 | M-55XA | LOCKWASHER for ground stud | 2 |
| 5 | A-179X | TRIP ARM | 2 |
| 6 | 15-186 | DRIVE SPRING | 1 |
| 7 | A-243X | SNAP RING | 2 |
| 8 | IXA-256 | WASHER for ground stud (steel) | 1 |
| 9 | IVA-583 | SPACING WASHER for drive cup | 1 |
| 10 | 2122 | SPACER for drive flange | 1 |
| 11 | X2286 | DRIVEN FLANGE GROUP | 1 |
| 12 | 2288 | DRIVE SPRING RETAINER | 1 |
| 13 | 3219 | PIVOT WASHER for breaker arm | 1 |
| 14 | 3230 | GROUND STUD NUT | 2 |
| 15 | 3539 | INSULATING LOCK for ground stud | 2 |
| 16 | 3945 | GROUND STUD | 1 |
| 17 | 4210 | BREAKER ARM LOCK | 1 |
| 18 | 5077 | CAM WIPER FELT | 1 |
| 19 | 5250 | SCREW for name plate | 2 |
| 20 | 5411 | CLAMP SCREW for condenser (Sems) | 2 |
| 21 | 5411 | CLAMP SCREW for coil core (Sems) | 2 |
| 22 | 5516 | RETAINING RING for rotor bearing | 1 |
| 23 | 5517 | ROTOR BEARING | 1 |
| 24 | 5518 | IMPULSE SPACER | 1 |
| 25 | 5519 | GASKET for impulse stop | 1 |
| 26 | 5520 | SPACER for bearing cage group | 1 |
| 27 | X5521 | BEARING CAGE GROUP | 1 |
| 28 | X5524 | COIL CORE | 1 |
| 29 | X5531 | DISTRIBUTOR ARM GROUP | 1 |
| 30 | 5532 | CONDENSER CLAMP | 1 |
| 31 | 5536 | COIL CONTACT SCREW | 1 |
| 32 | X5550 | IMPULSE STOP GROUP | 1 |
| 33 | Y5560 | ROTOR | 1 |
| 34 | 5567 | BEARING CAGE | 1 |
| 35 | 5610 | BUSHING for breaker plate | 1 |
| 36 | X5614 | CONDENSER ASSEMBLY | 1 |

| Ref No. | Wico Part No. | Description | No Req |
|---|---|---|---|
| 37 | 5620 | COIL CONTACT SPRING | 1 |
| 38 | 5622 | SCREW for distributor cap | 3 |
| 39 | X5632 | STOP BUTTON GROUP | 1 |
| 40 | 5633 | COIL CORE CLAMP | 2 |
| 41 | 5635 | GROUND CONNECTOR | 1 |
| 42 | X5653 | DISTRIBUTOR CAP UNIT | 1 |
| * | X5654 | GROUND CONNECTION UNIT (includes Ref. Nos. 1, 2, 4, 8, 14, 15, 16 and 41) | 1 |
| 43 | X5700 | COIL GROUP | 1 |
| * | 5717 | ALIGNING WASHER for breaker point | 1 |
| 44 | 5900 | SCREW for fixed contact (Sems) | 2 |
| 45 | 5926 | BALL BEARING SHIELD | 1 |
| 46 | X5996 | BREAKER CONTACT SET | 1 |
| 47 | X6000 | SECONDARY INTERLEAD GROUP | 1 |
| 48 | 6017 | CLAMP SCREW for breaker spring | 1 |
| 49 | 6081 | GASKET for distributor cap | 1 |
| 50 | X6150 | MAIN HOUSING REPL. GROUP | 1 |
| 51 | 6199 | OIL SEAL (repl. A-33X used on early models) | 1 |
| 52 | 6204 | OIL SLINGER | 1 |
| 53 | 6310 | DRIVE CUP (repl. 3870 used on early models) | 1 |
| 54 | 6424 | SNAP RING for impulse lock nut | 1 |
| 55 | 6425 | THRUST WASHER for impulse lock nut | 1 |
| 56 | K6444 | IMPULSE LOCK NUT KIT (repl. 6009 below serial No. 15431) | 1 |
| | K6445 | IMPULSE LOCK NUT KIT (repl. 6227 above serial No. 15430) | 1 |
| * | X6455 | IMPULSE COUPLING UNIT (includes Ref. Nos. 3, 5, 6, 7, 9, 10, 11, 12, 53, 56 (K6445) | 1 |
| 57 | 6465 | CLAMP SCREWS for impulse stop (Sems) | 4 |
| 58 | 6468 | BREAKER ARM FELT | 1 |
| 59 | 8792 | NAME PLATE | 1 |
| * | 10383 | COIL WEDGE | 1 |
| * | 10407 | ALIGNING WASHER for breaker point (thin) | 1 |
| 60 | | DRIVE GEAR (24 teeth) Wis. Motor No. GD-93-C For engine models VE4 and VF4. | 1 |
| | | DRIVE GEAR (27 teeth) Wis. Motor No. GD-103 For engine model VP4D. | 1 |

* Not illustrated

# WARRANTY

We guarantee each new engine sold by us to be free from defects in material and workmanship for six (6) months from date of shipment, but not to exceed ninety (90) days of service. The obligation under this Warranty, statutory or otherwise, is limited to the replacement or repair at our Milwaukee, Wisconsin factory, or at a point designated by us, of such part as shall appear to us, upon inspection at such point, to have been defective in material or workmanship.

This Warranty does not obligate us to bear the cost of labor or transportation charges in connection with the replacement or repair of defective parts, nor shall it apply to an engine upon which repairs or alterations have been made unless authorized by us.

We make no Warranty in respect to trade accessories, such being subject to the Warranties of their respective manufacturers.

We shall in no event be liable for consequential damages or contingent liabilities arising out of the failure of any engine or parts to operate properly.

No express, implied or statutory Warranty other than herein set forth is made or authorized to be made by us.

THIS MANUAL IS FOR MY WISCONSIN MODEL.....ENGINE

SPEC. No..... SERIAL No.....

THE ABOVE INFORMATION, WHICH WILL BE FOUND ON THE INSTRUCTION PLATE ATTACHED TO THE AIR SHROUD OF THE ENGINE, SHOULD BE FILLED IN. YOUR PROMPT ATTENTION TO THIS MATTER WILL MAKE IT CONVENIENT FOR YOU IN THE FUTURE, AS THIS INFORMATION MUST BE GIVEN WHEN ORDERING ENGINE REPAIR PARTS.

**For Your Own Record, Do Not Cut Out and Return to Factory.*

**WISCONSIN MOTOR CORPORATION**
**MILWAUKEE 46, WISCONSIN**

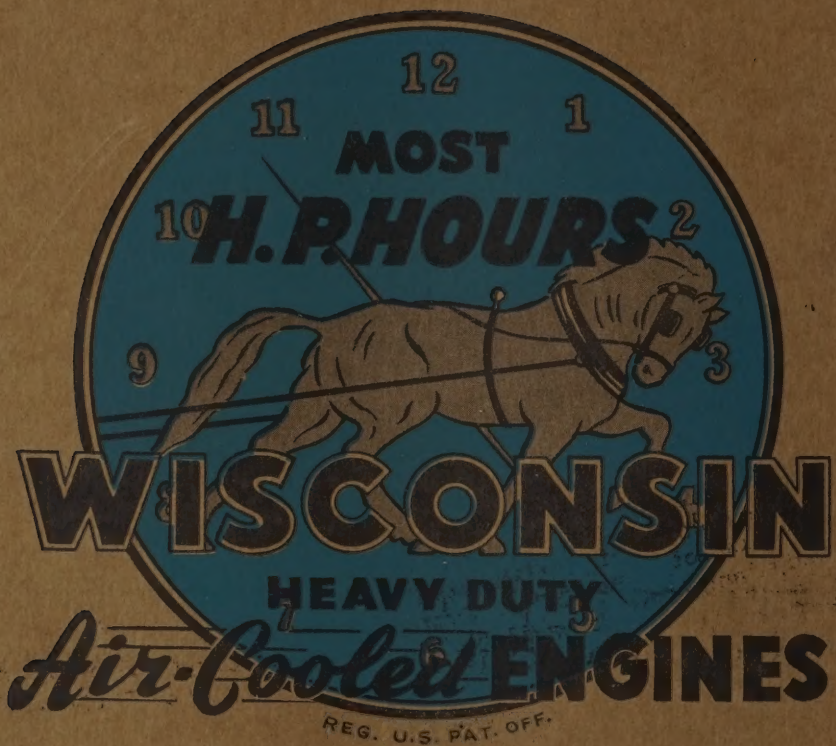


**WISCONSIN MOTOR CORPORATION**

**MILWAUKEE 46, WISCONSIN**

PRINTED IN U.S.A.